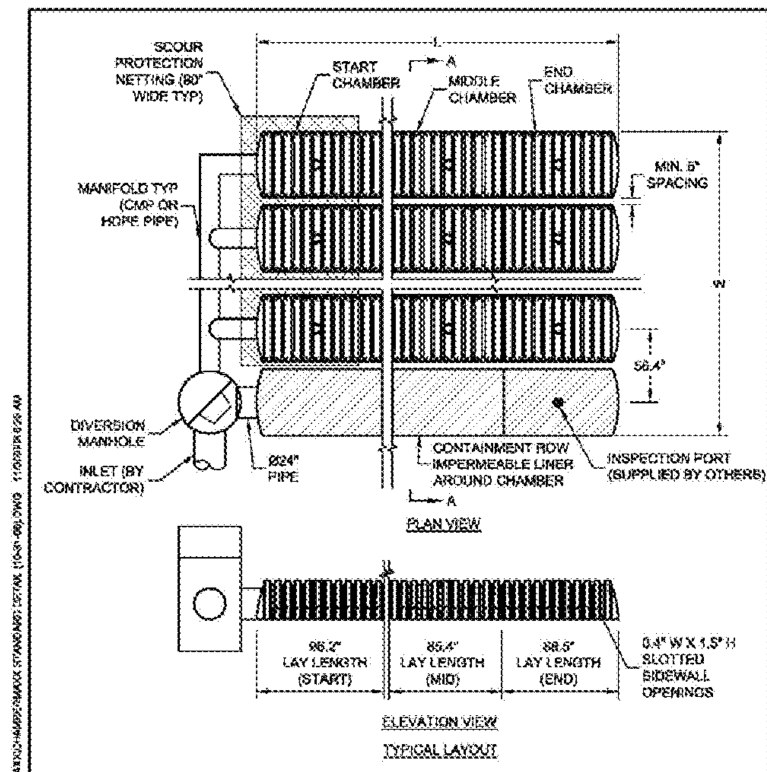

CHAMBERMAXX DESIGN DETAILS			
FEATURE	START CHAMBER	MIDDLE CHAMBER	END CHAMBER
OVERALL CHAMBER HEIGHT (IN)	30.3	30.3	30.3
OVERALL CHAMBER WIDTH (IN)	51.4	51.4	51.4
ACTUAL LENGTH (IN)	98.4	91.0	92.0
INSTALLED LAY LENGTHS (IN)	98.2	85.4	88.5
CHAMBER STORAGE VOLUME (CF)	52.5	49.3	48.2
CHAMBER STORAGE PER LINEAR FOOT (CF/LF)	6.6	6.9	6.5
*MIN. INSTALLED CHAMBER VOLUME (CF)	78.7	78.7	76.1
*MIN. INSTALLED CHAMBER VOLUME PER LINEAR FOOT (CF/LF)	9.8	10.8	10.3
CHAMBER WEIGHT (LB)	85.0	77.0	76.0
*6" OF STONE ABOVE AND BELOW CHAMBER, 5" CHAMBER SPACING AND 40% POROSITY			

* SITE SPECIFIC DATA REQUIREMENTS	
FOR DETAILED DESIGN ASSISSTANCE REFERENCE CHAMBERMAXX DYODS (DESIGN YOUR OWN DETENTION SYSTEM) SOFTWARE AND CHAMBERMAXX STAGE STORAGE CALCULATOR @ WWW.CONTECHSTORMWATER.COM	
TOTAL REQUIRED STORAGE VOLUME (CF)	
DEPTH TO INVERT BELOW ASPHALT (FT)	
LIMITING WIDTH (FT)	
LIMITING LENGTH (FT)	
POROUS STONE ABOVE CHAMBER (IN)	
POROUS STONE BELOW CHAMBER (IN)	
STONE POROSITY (0 TO 40%)	
MANIFOLD SYSTEM DIAMETER (IN)	
* PER ENGINEER OF RECORD	

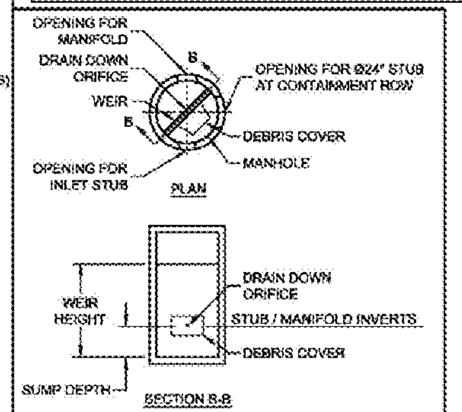

DIVERSION MANHOLE DETAIL

GENERAL NOTES

1. ALL ELEVATIONS, DIMENSIONS AND LOCATIONS OF RISERS AND INLETS SHALL BE VERIFIED BY THE ENGINEER OF RECORD.
2. PRIOR TO INSTALLATION OF THE CHAMBERMAXX SYSTEM A PRE-CONSTRUCTION MEETING SHALL BE CONDUCTED. THOSE REQUIRED TO ATTEND ARE THE SUPPLIER OF THE SYSTEM, THE GENERAL CONTRACTOR, SUB-CONTRACTORS AND THE ENGINEER.
3. CHAMBERMAXX CHAMBERS ARE MANUFACTURED FROM POLYPROPYLENE PLASTIC.
4. CHAMBERMAXX SYSTEM TO MEET AASHTO HS20/HS25 LIVE LOADING, PER AASHTO LRFD SECTION 12.
5. ACCESS COVERS TO MEET AASHTO HS20/HS25 LIVE LOADING.
6. MINIMUM COVER IS 18-INCHES TO BOTTOM OF FLEXIBLE PAVEMENT OR TO TOP OF RIGID PAVEMENT. FOR COVER HEIGHTS GREATER THAN 72-INCHES CONTACT YOUR LOCAL REPRESENTATIVE.
7. ALL PARTS PROVIDED BY CONTECH UNLESS OTHERWISE NOTED.
8. CONTAINMENT ROW COMPRISED OF CHAMBERS SURROUNDEDBY IMPERMEABLE LINER WITH A DIVERSION MANHOLECONNECTED BY A Ø24" PIPE.
9. CHAMBERMAXX BY CONTECH STORMWATER SOLUTIONS (800) 925-5240

INSTALLATION NOTES

1. CHAMBERMAXX INSTALLATION GUIDE TO BE REVIEWED BY CONTRACTOR PRIOR TO INSTALLATION.
2. PRIOR TO PLACING BEDDING, THE FOUNDATION MUST BE CONSTRUCTED TO A UNIFORM AND STABLE GRADE. IN THE EVENT THAT UNSUITABLE FOUNDATION MATERIALS ARE ENCOUNTERED DURING EXCAVATION, A TENSAR BX GEOGRID SHALL BE UTILIZED OR UNSUITABLE MATERIAL SHALL BE REMOVED AND BROUGHT BACK TO GRADE WITH FILL MATERIAL AS APPROVED BY THE ENGINEER OF RECORD. ONCE THE FOUNDATION PREPARATION IS COMPLETE, THE BEDDING MATERIAL CAN BE PLACED.
3. THE SCOUR PROTECTION NETTING TO EXTEND 1'-0" BEYOND OUTSIDE EDGE OF INLET CHAMBERS.
4. COVER ANY OPEN VOID SPACES GREATER THAN ¾" ON CHAMBERS WITH A NON-WOVEN GEOTEXTILE TO PREVENT INFILTRATION OF BACKFILL MATERIAL.
5. BACKFILL MATERIAL TO BE PLACED IN 6-INCH TO 8-INCH LOOSE LIFTS AND COMPACTED TO 90% AASHTO T99 STANDARD PROCTOR DENSITY. BACKFILL SHALL BE PLACED SUCH THAT THERE IS NO MORE THAN A TWO LIFT DIFFERENTIAL BETWEEN ANY OF THE CHAMBERS AT ANY TIME DURING THE BACKFILLING PROCESS. THE BACKFILL SHALL BE ADVANCED ALONG THE LENGTH OF THE CHAMBER SYSTEM AT THE SAME RATE TO AVOID DIFFERENTIAL LOADING ON THE CHAMBERS.
6. REFER TO CHAMBERMAXX INSTALLATION GUIDE FOR TEMPORARY CONSTRUCTION LOADING GUIDELINES.
7. IT IS ALWAYS THE CONTRACTOR'S RESPONSIBILITY TO FOLLOW OSHA GUIDELINES FOR SAFE PRACTICES.

KEY

1. RIGID OR FLEXIBLE PAVEMENT.
2. GRANULAR ROAD BASE.
3. WELL GRADED GRANULAR FILL. AASHTO M145 A1, A2, OR A3. COMPACT TO MIN. 90% STANDARD DENSITY PER AASHTO T99.
4. FREE DRAINING ANGULAR WASHED STONE 3/4" - 2" PARTICLE SIZE. COMPACT TO MIN. 90% STANDARD DENSITY PER AASHTO T99.

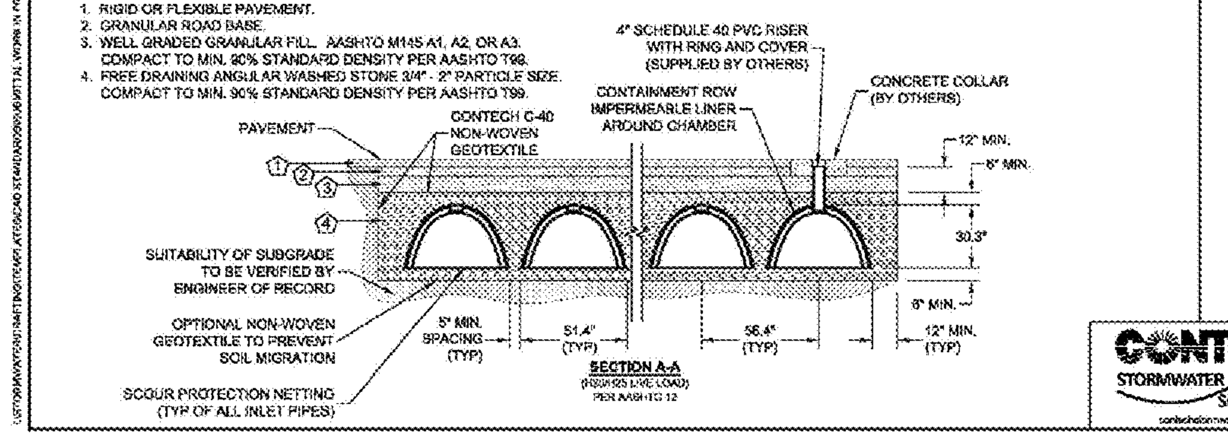

CHAMBERMaxx

CONTECH STORMWATER SOLUTIONS

CHAMBERMAXX STORMWATER RETENTION SYSTEM
STANDARD DETAIL
CONTAINMENT ROW OPTION

CONTECH CHAMBERMAXX STORMWATER RETENTION SYSTEM STANDARD DETAIL

BASE THICKNESS AND OPTION CODES

Base Group	Structural Range	Base Group Pay Item Number	Limerock LBR 100 (0.18)	Cemented Coquina LBR 100 (0.18)	Shell Rock LBR 100 (0.18)	Bank Run Shell LBR 100 (0.18)	Graded Aggregate Base LBR 100 (0.15)	Type B-12.5 (0.30)	B-12.5 And 4" Granular Subbase, LBR 100 * (0.30 & 0.15)	RAP Base (NA)
1	0.65-0.75	701	4"	4"	4"	4"	4½"	Δ 4"		□ 5"
2	0.80-0.90	702	5"	5"	5"	5"	5½"	Δ 4"		
3	0.95-1.05	703	5½"	5½"	5½"	5½"	6½"	Δ 4"		
4	1.05-1.15	704	6"	6"	6"	6"	7½"	Δ 4"		
5	1.25-1.35	705	7"	7"	7"	7"	8½"	4½"		
6	1.35-1.50	706	8"	8"	8"	8"	9"	5"		
7	1.50-1.65	707	8½"	8½"	8½"	8½"	10"	5½"		
8	1.65-1.75	708	9½"	9½"	9½"	9½"	11"	5½"		
9	1.75-1.85	709	10"	10"	10"	10"	12"	6"	4"	
10	1.90-2.00	710	11"	11"	11"	11"	Ø 13"	6½"	4½"	
11	2.05-2.15	711	12"	12"	12"	12"	Ø 14"	7"	5"	
12	2.20-2.30	712	12½"	12½"	12½"	12½"		7½"	5½"	
13	2.35-2.45	713	Ø 13½"	Ø 13½"	Ø 13½"	Ø 13½"		8"	6"	
14	2.45-2.55	714	Ø 14"	Ø 14"	Ø 14"	Ø 14"		8½"	6½"	
15	2.60-2.70	715						9"	7"	

Base Options / Structural Number (Per. In.)

GENERAL NOTES

1. On new construction and complete reconstruction projects where an entirely new base is to be built, the design engineer may specify just the Base Group and any of the unrestricted General Use Optional Bases shown in that base group may be used. Note, however, that some thick granular bases are limited to widening which prevents their general use.
2. Where base options are specified in the plans, only those options may be bid and used.
3. The designer may require the use of a single base option, for instance Type B-12.5 in a high water condition. This will still be bid as Optional Base.

* For granular subbase, the construction of both the subbase and Type B-12.5 will be paid for under the contract unit price for Optional Base. Granular subbases include Limerock, Cemented Coquina, Shell Rock, Bank Run Shell and Graded Aggregate Base at LBR 100. The base thickness shown is Type B-12.5. All subbase thicknesses are 4".

Ø To be used for widening only, three feet or less.

Δ Based on minimum practical thicknesses.

□ Restricted to nonlimited access shoulder base construction.

GENERAL USE OPTIONAL BASE GROUPS AND STRUCTURAL NUMBERS

2008 FDOT Design Standards | *OPTIONAL BASE GROUP AND STRUCTURAL NUMBERS* | Last Revision 00 | Sheet No. 1 of 2 | Index No. 514

FDOT INDEX 514 (3)

KEYED NOTES

1. N/A
2. 4" COMPACTED AGGREGATE BASE
3. PAVEMENT.
4. COMPRESSIBLE FILLER (3/4" MAXIMUM). CUT BACK AND PROVIDE SEALANT, TYPICAL, AT ALL JOINTS WITH FILLER.
5. 1/4" TOOLED JOINT
6. 6" X 6" W2.9 x W2.9 W.W.M.

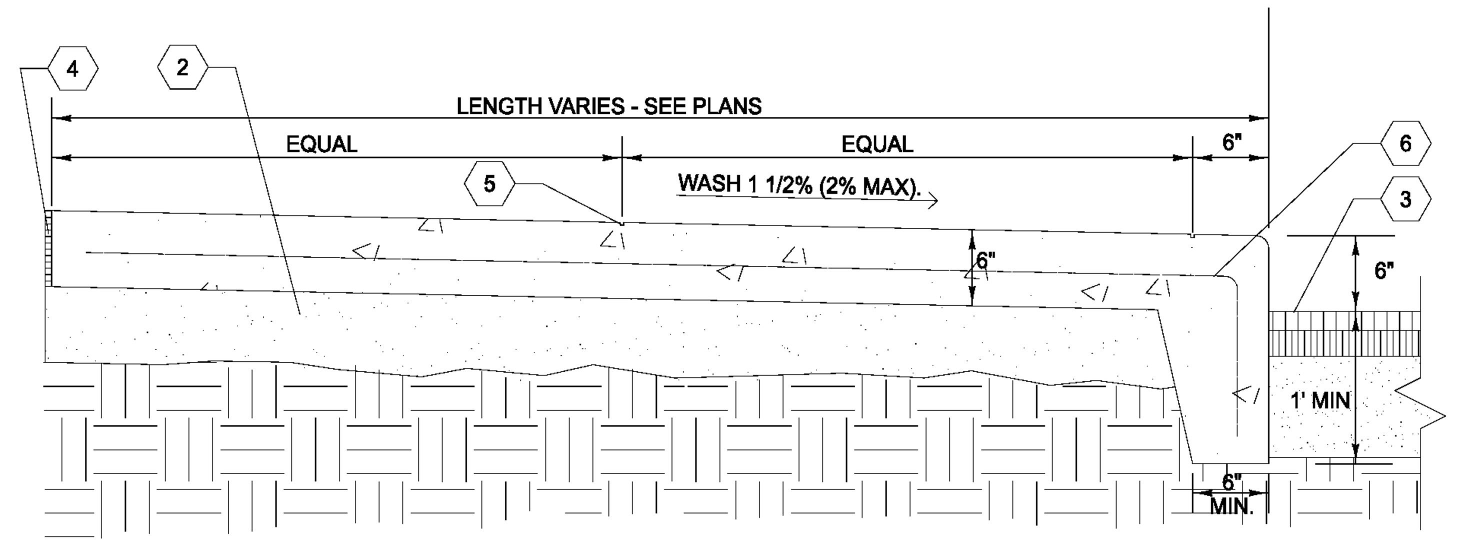

PERIMETER SIDEWALK (6)

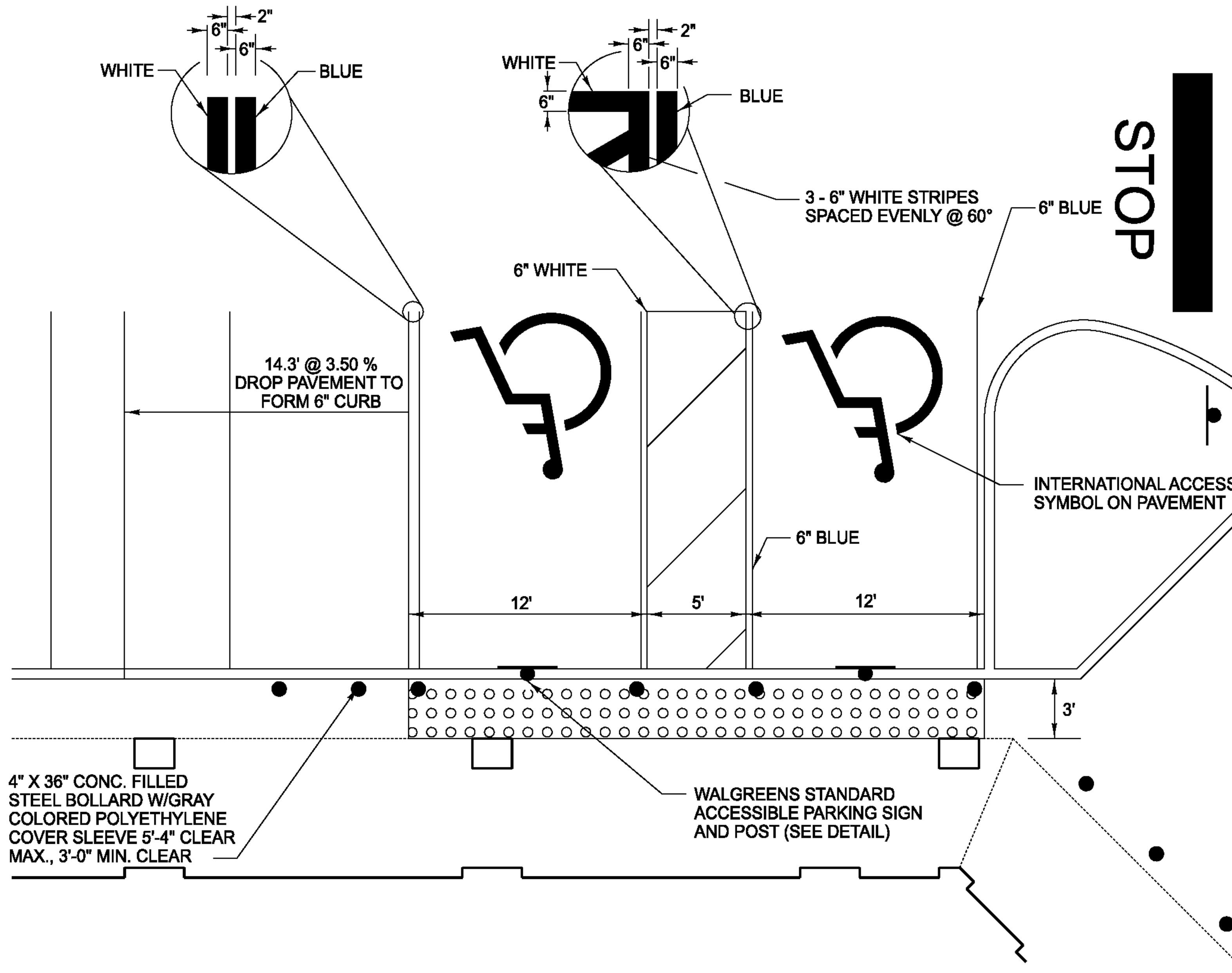

NOTES:

- ADA ACCESSIBLE PARKING SPACES SHALL NOT EXCEED 2.00% IN ANY DIRECTION.
- HANDICAP PARKING AREA IS TO RECEIVE INTEGRAL COLORED CONCRETE C-34.
- FOR ADDITIONAL INFORMATION REGARDING THE HANDICAP PARKING AND FRONT OF BUILDING ENTRANCE ELEMENTS REFER TO ARCHITECTURAL DRAWING C6.2.

(1) HANDICAP PARKING (5)

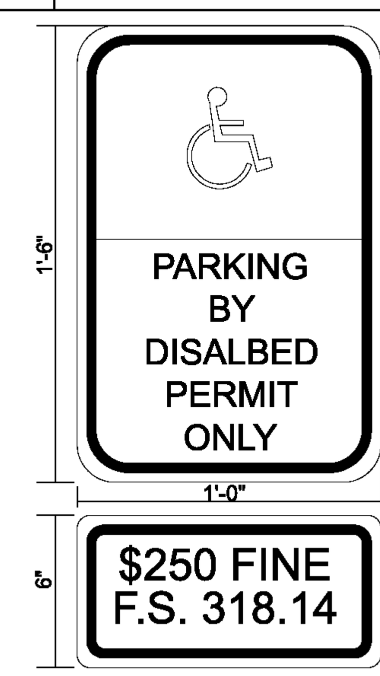

NOTE (R7-8 SIGN): THIS IS A STANDARD SIGN AND MAY BE ORDERED FROM ANY TRAFFIC SIGN SUPPLIER BY NUMBER. THE SIGN MUST BE SUPPLEMENTED WITH A "VAN ACCESSIBLE" SIGN AS APPLICABLE AND/OR AMOUNT OF THE FINE FOR ILLEGALLY PARKING IN THE RESERVED SPACE(S) A MUNICIPALITY MAY IMPOSE. CONFIRM WITH LOCAL REGULATIONS. PER FLORIDA STATUTE 553.5041(6) INDICATE $250 FINE FOR ILLEGAL USE.

1. ALL LETTERS ARE 1" SERIES "C" PER MUTCO
2. TOP PORTION OF SIGN SHALL HAVE REFLECTORIZED (ENGINEERING GRADE) BLUE BACKGROUND WITH WHITE REFLECTORIZED LEGEND & BORDER.
3. BOTTOM PORTION OF SIGN SHALL HAVE A REFLECTORIZED (ENGINEERING GRADE) WHITE BACKGROUND WITH BLACK OPAQUE LEGEND & BORDER.
4. FINE NOTIFICATION SIGN SHALL HAVE A REFLECTORIZED (ENGINEERING GRADE) WHITE BACKGROUND WITH BLACK OPAQUE LEGEND & BORDER.
5. ONE (1) SIGN REQUIRED FOR EACH PARKING SPACE.
6. INSTALLATION HEIGHT OF LOWEST SIGN SHALL HAVE A MINIMUM OF 7'-0" CLEARANCE TO FINISH GRADE.

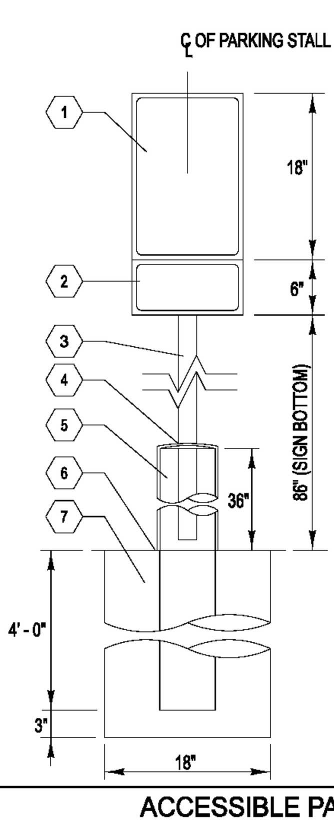

KEYED NOTES

1. ACCESSIBILITY SIGN, SEE DETAIL THIS SHEET.
2. SUPPLEMENTAL SIGN SHALL BE MOUNTED MIN 7'-0" ABV PAVEMENT PER FLORIDA STATUTE 553.5041(6) & SHALL INDICATED $250 FINE FOR ILLEGAL USE
3. 2"X 2" STEEL TUBE EXTENDED INTO CONCRETE FILLED 6"Φ PIPE.
4. SEALANT.
5. HSS 6"Φ x .28" THICK PIPE, CONCRETE FILLED. PROVIDE 1/4" WELDED CLOSURE PLATE AT BOTTOM. ALL STEEL TO BE RUST FREE AND PRIME COATED. BOLLARD TO RECEIVE GRAY POLYETHYLENE COVER (FROM IDEAL SHIELD - 313-842-7290).
6. FINISHED GRADE.
7. 18" DIA. CONCRETE FOOTER, USE SNOTUBE FORM.

ACCESSIBLE PARKING SIGN AND POST (5) (6)

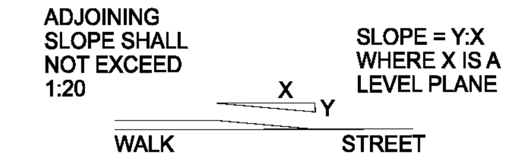

MEASUREMENT OF CURB RAMP SLOPE

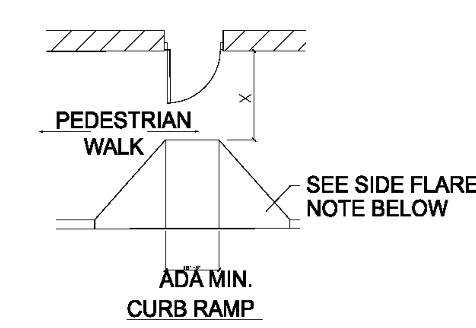

CURB RAMP

"X" IS 60" MIN. AT AN OUT SWING DOOR WITH A SLOPE OF 1:50 (2%) MAXIMUM. LEVEL SURFACE IS PREFERED.

SIDE FLARE NOTE: (SEE REFERENCE DIAGRAM ABOVE). SIDE FLARES SHALL HAVE A MAXIMUM SLOPE OF 1:10 (10%). WHERE "X" IS LESS THAN 48", SIDE FLARE SLOPE SHALL BE 1:12 (8.33%) MAXIMUM. WHERE "X" IS LESS THAN 36", WALGREENS PREFERS THE "IN-LINE" RAMP SHOWN BELOW.

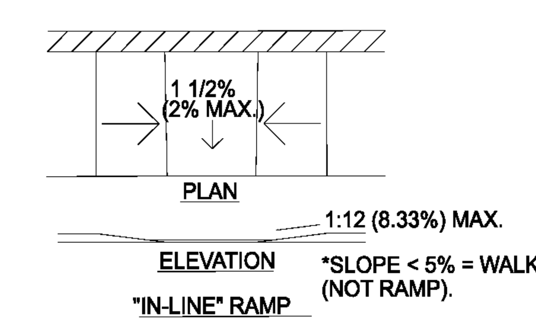

"IN-LINE" RAMP

NOTES: A CURB RAMP(S) MUST BE PROVIDED ALONG AN ACCESSILBLE PATH FROM THE PARKING LOT TO WALGREENS CURBED SIDEWALK.

A CURB RAMP(S) MUST ALSO BE PROVIDED IN THE PARKING LOT AT ALL INTERMEDIATE AND PERIMETER CURBS ALONG THE ACCESSIBLE ROUTE CONNECTING TO PUBLIC SIDEWALKS.

A RAMP IS ANY SLOPE GREATER THAN 1:20 (5%) AND SHALL HAVE A MAXIMUM SLOPE OF 1:12 (8.33%). THE MAXIMUM SLOPE IS 1" OF RISE PER FOOT OF DISTANCE TRAVELED. ALL DETECTABLE WARNING AREAS OF THE RAMP ARE TO HAVE AN INTEGRAL RED COLOR.

THE CLEAR WIDTH OF ANY RAMP IS A MINIMUM OF 36".

CURB RAMPS HAVE A MAXIMUM RISE OF 6" AND DO NOT REQUIRE HANDRAILS.
ANY RAMP WITH GREATER THAN A 6" RISE SHALL HAVE HANDRAILS ON BOTH SIDES AND CURBED EDGE PROTECTION ON BOTH SIDES. EDGE PROTECTION CONSISTS OF CURBS, WALLS, RAILINGS, OR PROJECTING SURFACES THAT PREVENT PEOPLE FROM SLIPPING OFF THE RAMP. HANDRAIL DETAILS SHALL FOLLOW ACCESSIBLE GUIDELINES.

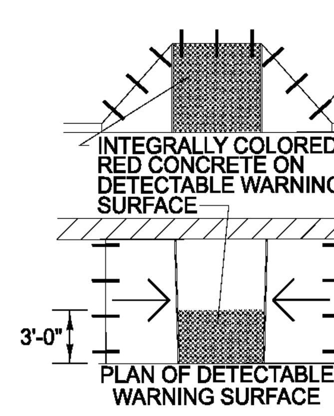

PLAN OF DETECTABLE WARNING SURFACE

NOTE: ACCESSIBLE RAMPS AND CURB RAMPS WHERE POURING OF A SEPARATE INTEGRALLY COLORED CONCRETE IS REQUIRED, INSTALL SHEAR DOWELS 2'-0" O.C. AND KEYWAYS TO PREVENT HEAVING OF RAMPS W/ ADJACENT SIDEWALK OR CONC. SURFACE.

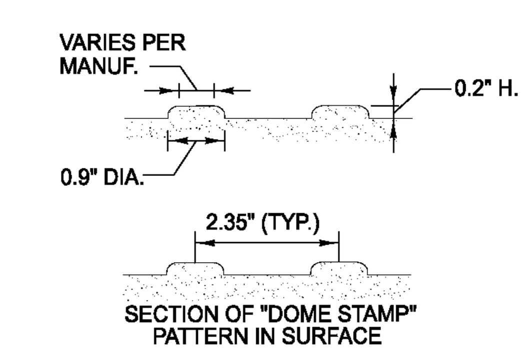

SECTION OF "DOME STAMP" PATTERN IN SURFACE

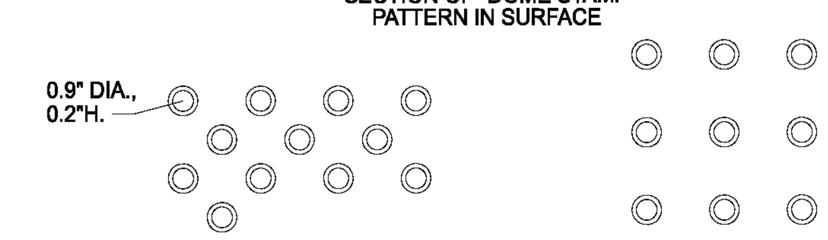

TRIANGULAR PATTERN

SQUARE PATTERN

(EITHER PATTERN IS ACCEPTABLE)

PLAN OF "DOME STAMP" PATTERN IN SURFACE

CURB RAMPS MUST HAVE A DETECTABLE WARNING FEATURE EXTENDING THE FULL WIDTH AND DEPTH OF THE RAMP (MID-WALK "IN-LINE" RAMPS ONLY NEED DETECTABLE WARNINGS AT WALK/PARKING TRANSITION). THE DETECTABLE SURFACE MUST CONSIST OF RAISED TRUNCATED DOMES WITH A DIAMETER OF NOMINAL 0.9 INCHES, A HEIGHT OF NOMINAL 0.2 INCHES AND A CENTER-TO CENTER SPACING OF NOMINAL 2.35 INCHES. THE TEXTURE OF THE DETECTABLE WARNING FEATURE MUST CONTRAST WITH THE SURROUNDING SURFACES (EITHER LIGHT-ON-DARK OR DARK-ON-LIGHT). SEE ABOVE.
ACCEPTABLE PAVER MANUFACTURERS :
-HANOVER ARCHITECTURAL PRODUCTS, DETECTABLE WARNING PAVERS,
www.hanoverpavers.com/html/detectable.html
-TekWay ™ - DETECTABLE WARNING SYSTEM
www.strongqo.com/ourproducts.html
-NuWay, CAST IN TACT, DETECTABLE WARNING PAVERS
www.nuwayinc.com/CAST_IN_TACT_1.pdf

CURB RAMPS AND OTHER RAMPS (6)

Professional Engineer

No.	Date	Description	Initials
6	02/05/2010	Per Walgreens Review Comments	ARA
5	11/16/2009	Revised per Walgreens Architect	ARA
4	08/06/2009	Revised Details	ARA
3	07/02/2009	Per FDOT Comments	ARA
2	05/28/2009	Per FDOT Comments	ARA
1	01/05/2009	Per COJ Comments	ARA

R E V I S I O N S

ACCESSIBLIITY, PAVING AND DRAINAGE DETAILS (6)

Walgreens
Jacksonville, Florida
SWC Fouraker Rd & Normandy Blvd
Store No. 13450

DO NOT SCALE THIS DRAWING - DIMENSIONS AND NOTES TAKE PREFERENCE

TAYLOR & WHITE, INC.
Consulting and Design Engineers
8936 Western Way, Suite 190 - Jacksonville, Florida 32256
Tel. (904) 346-0671 - Fax (904) 346-3051 - Toll Free (877) 426-4440
www.taylorandwhite.com

Scale:	N.T.S.
Project Manager:	DGT
Designer:	AA
Drawn by:	AA
Certificate of Authorization:	7298
Key Map	
Project No.:	08140.07
Date:	November 2009
Sheet No.:	C2.6

NOT RELEASED FOR CONSTRUCTION BY

N:\08140 Walgreens Normandy\Design\wgfapddt02.plt