FWH Architects
3336 Grand Blvd. Suite 102
Holiday, Florida 34690
Ph. 727. 815. 3336
Fax 727. 815. 3337
Lic.# AA 0003300

PROJECT TYPE

DRAWINGS/SPECIFICATIONS BY:
- ☐ WALGREENS' CONSULTANT
- ■ LANDLORD'S CONSULTANT

CONSTRUCTION WORK BY: (UNLESS NOTED OTHERWISE)
- ☐ WALGREENS' CONTRACTOR
- ■ LANDLORD'S CONTRACTOR (TURNKEY CONSTRUCTION)

STORE		BUILDING	
NEW.....	■	NEW.....	■
REMODELING...	☐	EXISTING.....	☐
RELOCATION...	☐	NEW SHELL ONLY	☐
OTHER.....	☐		

CHEHAYEB & ASSOCIATES, INC.
CONSULTING ENGINEERS
3702 AZEELE ST.
TAMPA, FL 33609
(813) 876-1415
(fax) 876-0913
LIC. #49521 SOUHEIL CHEHAYEB CERT. #7340
09-97

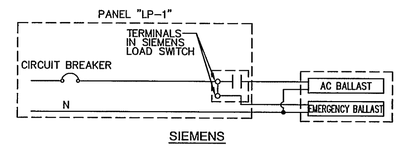

SIEMENS

EMERGENCY UNIT BATTERIES WIRING DETAIL PANEL LP-1 (CIRCUIT 5)

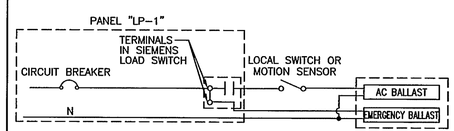

SIEMENS

EMERGENCY UNIT BATTERIES WIRING DETAIL PANEL LP-1 (CIRCUITS 2 & 6)

4
E2.1C

THE FOLLOWING TEST MUST BE PERFORMED BY ELECTRICAL CONTRACTOR:

1. **PHARMACY OVERRIDES**
   CHECK THAT LOCAL OVERRIDES AND OVERRIDE PUSHBUTTON ON PANEL "LP-SP" DOOR WORKS.

2. **OVERRIDES OTHER THAN PHARMACY**
   CHECK THAT OVERRIDE WORKS.

3. **SECURITY INTERLOCK**
   INITIAL CONDITIONS:
   - OVERRIDE PUSHBUTTONS/SWITCHES ON PANEL "LP-SP" DOOR SHALL BE OFF.
   - ALL THE LIGHTS INSIDE THE STORE SHALL BE **ON**.
   - ALL EXTERIOR LIGHTS SHALL BE **OFF** (EXCEPT LIGHTS ON CIRCUIT 14 COULD BE ON IF IT IS DARK OUTSIDE).

   ACTIONS:
   - DISCONNECT WIRE ON TERMINAL "NC" (RELAY 1) IN D8129 RELAY MODULE

   RESULTS:
   - ALL INTERIOR LIGHTS (EXCEPT NIGHT LIGHTS) SHALL TURN **OFF**.

4. **SECURITY INTERLOCK.** (CONT'D.)
   INITIAL CONDITIONS:
   - WIRE ON TERMINAL "NC" IS STILL DISCONNECTED AND ALL INTERIOR LIGHTS (EXCEPT NIGHT LIGHTS) ARE STILL **OFF**.

   ACTIONS:
   - INSTALL JUMPER BETWEEN TERMINALS "C" AND "NO" (RELAY 2) IN D8129 RELAY MODULE.

   RESULTS:
   - ALL INTERIOR LIGHTS AND ALL EXTERIOR LIGHTS MUST TURN **ON**.

   REMOVE JUMPER BETWEEN TERMINALS "C" AND "NO" (RELAY 2) AND RESTORE WIRE ON TERMINAL "NC" (RELAY 1).

~~INTERLOCK WITH HONEYWELL CONTROLLER~~
~~(APPLIES TO G.E. AND SQ. "D" ONLY)~~
~~1. HONEYWELL CONTROLLER: SET STAGE 1 DIAL AT #3 AND STAGE 2 DIAL AT #8.~~
~~"SET/RUN" SWITCH MUST BE IN "RUN" POSITION.~~
~~SECURITY SYSTEM SHALL BE DISARMED.~~

~~2. ACTIONS: COVER PHOTOCELL (USE TWO GLOVES OR CARDBOARD BOX, DO NOT USE TAPE!!!).~~
~~RESULTS:~~
~~- TIME BEFORE 7:30 AM – ALL OUTDOOR LIGHTS (EXCEPT LIGHTS ON CIRCUIT 14) MUST TURN OFF.~~
~~- TIME BETWEEN 7:30 AM & 8:00 – CIRCUIT #14 MUST BE ON. PARKING LIGHTS (CIRCUITS 1/22 – GROUP 8) SHALL TURN ON.~~
~~- TIME AFTER 8:00 AM – SIGNS, CANOPY, FLOODS AND THE REST OF THE PARKING LOT LIGHTS (ALL THE CIRCUITS, GROUPS #6, 7, 8, 9, 10, 12) MUST TURN ON.~~
~~3. ACTIONS: WITH ALL EXTERIOR LIGHTS STILL ON DISCONNECT WIRE ON TERMINAL "NC" (RELAY 1) IN D8129 RELAY MODULE.~~
~~RESULTS:~~
~~- SIGNS, CANOPY, FLOODS (GROUPS 7, 10, 12) MUST TURN OFF.~~
~~- 5 MINUTES LATER ALL PARKING LOT LIGHTS (GROUPS 8 & 9) MUST TURN OFF.~~
~~4. RESTORE WIRE ON TERMINAL "NC" (RELAY 1) IN D8129 RELAY MODULE.~~
~~5. UNCOVER PHOTOCELL.~~

TESTING

~~(FOR HONEYWELL CONTROLLER ADJUSTMENT)~~
~~(APPLIES TO G.E. AND SQ. "D" ONLY)~~
~~1. SETTING #3 FOR STAGE 1 DIAL (PARKING LOT) AND #8 FOR STAGE 2 DIAL (SIGNS AND AWNING/CANOPY) MENTIONED ABOVE ARE PRELIMINARY. THE ACTUAL SETTINGS MUST BE DONE IN THE EVENING BEFORE DUSK OR EARLY IN THE MORNING WHEN IT IS STILL DARK.~~

~~EVENING ADJUSTMENT:~~

~~1. REMOVE HONEYWELL CONTROLLER PLASTIC COVER (ONE SCREW).~~
~~2. SET "SET/RUN" SWITCH TO "SET" POSITION. SET BOTH DIALS (STAGE 1 AND STAGE 2) AT #1. BOTH RED LEDS SHALL BE OFF. ALL EXTERIOR LIGHTS SHALL BE ON.~~
~~3. AT DUSK (APPROXIMATELY 10 FC) SLOWLY ROTATE STAGE 1 DIAL TOWARD BIGGER NUMBERS UNTIL RED LED BELOW DIAL TURNS ON. CHECK THAT ALL SIGNS AND AWNINGS/CANOPY LIGHTS ARE ON.~~
~~4. WAIT TILL IT GETS DARKER – AT APPROXIMATELY 20 FC SLOWLY ROTATE STAGE 2 DIAL TOWARD BIGGER NUMBERS UNTIL RED LED BELOW DIAL TURNS ON. CHECK THAT ALL EXTERIOR LIGHTS ARE ON.~~
~~5. TURN "SET/RUN" SWITCH TO "RUN" POSITION AND REPLACE PLASTIC COVER.~~

~~MORNING ADJUSTMENT:~~

~~1. REMOVE HONEYWELL CONTROLLER PLASTIC COVER (ONE SCREW).~~
~~2. SET "SET/RUN" SWITCH TO "SET" POSITION. SET BOTH DIALS (STAGE 1 AND STAGE 2) AT #10. BOTH RED LEDS SHALL BE ON. ALL EXTERIOR LIGHTS SHALL BE ON.~~
~~3. WAIT TILL IT GETS BRIGHTER. AT LIGHT LEVEL SLIGHTLY HIGHER THAN 25 FC SLOWLY ROTATE STAGE 1 DIAL TOWARD SMALLER NUMBERS UNTIL RED LED BELOW TURNS OFF. CHECK THAT PARKING LOT, WALLPACKS AND FLOODLIGHTS ARE ON.~~
~~4. WAIT TILL LIGHT LEVEL SLIGHTLY HIGHER THAN 100FC. SLOWLY ROTATE STAGE 2 DIAL TOWARD SMALLER NUMBERS UNTIL RED LED BELOW TURNS OFF. CHECK THAT ALL EXTERIOR LIGHTS ARE OFF.~~
~~5. TURN "SET/RUN" SWITCH TO "RUN" POSITION AND REPLACE PLASTIC COVER.~~

~~TEMPERATURE CONTROLLER:~~
~~NOTES:~~
~~- TORCH OR HEAT GUN MUST NOT BE USED TO WARM SENSOR.~~
~~- HEATER MAY NOT TURN ON BECAUSE ITS THERMOSTAT SETTING IS TOO LOW (DURING THE TEST THERMOSTAT SETTING COULD BE RAISED TEMPORARILY).~~
~~- SENSOR WARMING TAKES A FEW MINUTES.~~

~~ABBREVIATION:~~
~~WH = WALL HEATERS~~
~~EH = CHANGE HEATER~~
~~TERMINAL "NC" = TERMINAL "NC" (RELAY 1) IN D8129 RELAY MODULE~~
~~WARM SENSOR = SENSOR SHOULD BE WARMED WITH HANDS~~
~~COOL SENSOR = WITH SPRAY = SPRAY SENSOR WITH "COMPUTER COOLER" (PURCHASE THROUGH RADIO SHACK)~~
~~COOL SENSOR WITH ICE = USE CUP WITH ICE~~
~~T = TEMPERATURE~~

~~A. NON-24 HOUR TEST:~~
~~1. OUTSIDE TEMPERATURE (SHOWN ON CONTROLLER DISPLAY) BELOW 25°F:~~
~~a. WITH SECURITY DISARMED VERIFY THAT WH AND EH ARE ON. WARM SENSOR. VERIFY THAT WH AND EH TURN OFF (AT T ABOVE 50°F).~~
~~ALLOW SENSOR TO COOL TO OUTSIDE TEMPERATURE (WATCH CONTROLLER DISPLAY).~~
~~b. DISCONNECT WIRE ON TERMINAL "NC".~~
~~VERIFY THAT WH AND EH (FOR STORE WITH VESTIBULE) ARE ON. (EH FOR STORE WITHOUT VESTIBULE SHALL BE OFF).~~
~~WARM SENSOR.~~
~~VERIFY THAT WH TURN OFF (AT T ABOVE 25°F) AND EH (FOR STORES WITH VESTIBULE) TURN OFF (AT T ABOVE 50°F).~~
~~RESTORE WIRE ON TERMINAL "NC".~~

~~2. OUTSIDE TEMPERATURE ABOVE 50°F:~~
~~a. WITH SECURITY DISARMED VERIFY THAT WH AND EH ARE ON.~~
~~WARM SENSOR. VERIFY THAT WH AND EH TURN OFF (AT T ABOVE 50°F).~~
~~ALLOW SENSOR TO COOL TO OUTSIDE TEMPERATURE.~~
~~b. DISCONNECT WIRE ON TERMINAL "NC".~~
~~VERIFY THAT:~~
~~1. WH AND EH (FOR STORE WITHOUT VESTIBULE ARE OFF. EH (FOR STORE WITH VESTIBULE SHALL BE ON (NOT BELOW 50°F).~~
~~FOR STORE WITH VESTIBULE: WARM SENSOR AND VERIFY THAT EH TURN OFF (AT T ABOVE 50°F).~~
~~COOL SENSOR WITH SPRAY.~~
~~WH AND EH SHALL TURN ON.~~
~~RESTORE WIRE ON TERMINAL "NC".~~

~~3. OUTSIDE TEMPERATURE ABOVE 50°F:~~
~~a. WITH SECURITY DISARMED VERIFY THAT WH AND EH ARE OFF.~~
~~b. DISCONNECT WIRE ON TERMINAL "NC". VERIFY THAT WH AND EH ARE OFF. RESTORE WIRE ON TERMINAL "NC".~~
~~COOL SENSOR WITH ICE. VERIFY THAT WH AND EH TURN ON (AT T BELOW 50°F).~~
~~OUTSIDE TEMPERATURE BELOW 50°F:~~
~~WH AND EH SHALL BE ON.~~
~~WARM SENSOR. WH AND EH SHALL TURN OFF (AT T ABOVE 50°F).~~

2
E2.1C

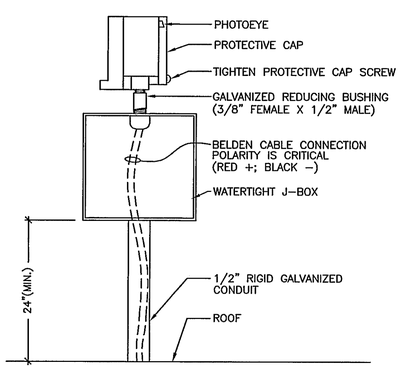

COMBINATION LIGHT TEMPERATURE SENSOR INSTALLATION DETAIL (FOR SIEMENS ONLY)

NOT TO SCALE

NOTES:
1. ELECTRICAL CONTRACTOR MUST INSTALL COMBINATION LIGHT TEMPERATURE SENSOR AS SHOWN ON THE DETAIL.
2. NOT USED.
3. COMBINATION LIGHT TEMPERATURE SENSOR EYE MUST BE INSTALLED ON THE ROOF FACING NORTH.
4. COMBINATION LIGHT TEMPERATURE EYE MUST NOT FACE ARTIFICIAL LIGHT SOURCES (SUCH AS STREET LIGHTS, ETC.).
5. COMBINATION LIGHT TEMPERTURE SENSOR IS MOISTURE SENSITIVE. CONNECTIONS MUST BE TIGHTENED PROPERLY. THE WHOLE ASSEMBLY MUST BE WATER TIGHT.
6. CONDUIT WITH COMBINATION LIGHT TEMPERATURE SENSOR WIRING SHALL PENETRATE ROOF VIA SATELLITE ANTENNA PORTAL. PROPER CONDUIT SUPPORT IS EXTREMELY IMPORTANT.
7. COMBINATION LIGHT TEMPERATURE SENSOR WIRING MUST NOT SHARE THE SAME CONDUIT WITH POWER WIRING.

E2.1C

6. **SALES AREA (REFER TO GROUPS 1, 2 & 3 LOGIC, E2.1A)**
   VERIFY THE FOLLOWING:
   a. TIME: BEFORE 7:55 AM AND SECURITY SYSTEM IS DISARMED – ONLY "MAINTENANCE LIGHTS" – CIRCUITS (21,24,25) MUST BE ON. (EVERY OTHER FIXTURE IN SIX ROWS OF LIGHTS SPACED EVENLY).
   b. TIME: AFTER 7:55 AM – ALL THE SALES AREA AND THE REST OF GROUP 2 CIRCUITS MUST BE ON.
   c. TIME: 10:10 PM – 10:30 PM – ONLY SIX CIRCUITS. (21,24,25,13,22,27) MUST BE ON (EVERY OTHER FIXTURE IN TWELVE ROWS OF LIGHTS SPACED EVENLY). ALL THE CIRCUITS OF GROUP 2 MUST BE OFF.
   d. TIME: AFTER 10:30 PM – ALL THE CIRCUITS TURN OFF EXCEPT GROUP #1.

7. **PHARMACY (REFER TO GROUP 5 LOGIC, E2.1A)**
   VERIFY THE FOLLOWING:
   a. TIME: BEFORE 7:55 AM PHARMACY LIGHTS (CIRCUITS 1 & 3) MUST BE OFF.
   b. TIME: AFTER 7:55 AM ALL PHARMACY LIGHTS MUST BE ON.
   c. TIME: 10:30 PM – ALL PHARMACY LIGHTS MUST BE OFF.

8. **GONDOLA RECEPTACLES**
   VERIFY THE FOLLOWING:
   a. TIME: BEFORE 7:55 AM – RECEPTACLES (CIRCUITS 25,27,29,31,33,35) MUST BE DE-ENERGIZED.
   b. TIME: AFTER 7:55 AM – ALL RECEPTACLES CIRCUITS MUST BE ENERGIZED.
   c. TIME: 10:10 PM – ALL RECEPTACLE CIRCUITS MUST BE DE-ENERGIZED.

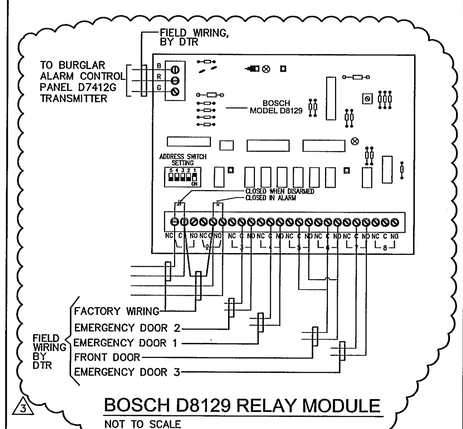

BOSCH D8129 RELAY MODULE

NOT TO SCALE

5
E2.1C

NO.	DATE	DESCRIPTION
3	04.05.10	REVISED PER WGS 2ND. REVIEW COMMENTS

REVISIONS

CERTIFICATION AND SEAL

I HEREBY CERTIFY THAT THIS PLAN AND SPECIFICATION WERE PREPARED BY ME OR UNDER MY DIRECT SUPERVISION AND THAT I AM A DULY REGISTERED ARCHITECT OR ENGINEER UNDER THE LAWS OF THE STATE OF FLORIDA AS SIGNIFIED BY MY HAND AND SEAL.

PROJECT NAME
STORE #13450
SWC OF FOURAKER & NORMANDY
JACKSONVILLE, FLORIDA

DRAWING TITLE
TESTING, MISCELLANEOUS ELECTRICAL DETAILS

DATE: 11.30.09	WALGREENS STORE NO. 13450	DRAWING NO.	
DRAWN BY: P.H.	SCALE: AS SHOWN	E2.1C	
REVIEWED BY: S.C.	RELEASED TO CONSTRUCTION –	FWH PROJECT NO. 0913	