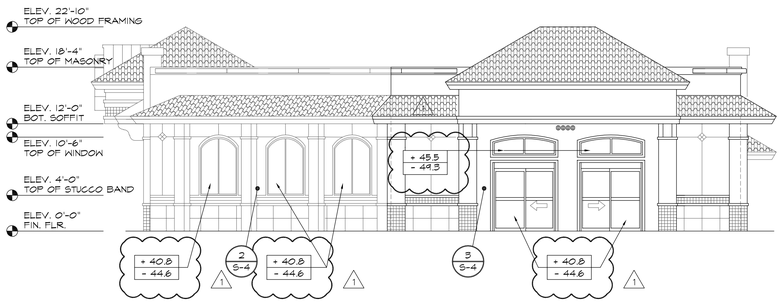

1 / S-4 NORTH ELEVATION (ARCHITECTURAL)
SCALE: 1/8" = 1'-0"

FILLED CELL NOTE:
USE 2500 PSI PUMP MIX CONC. W/ 8"-10" DESIGN SLUMP. REBAR TO BE #5 W/ 30" LAP. PROVIDE CLEANOUTS FOR TYING REINF. @ GROUTED CELLS TYP. TYP. REFER TO FOUND. PLAN FOR LOCATIONS.

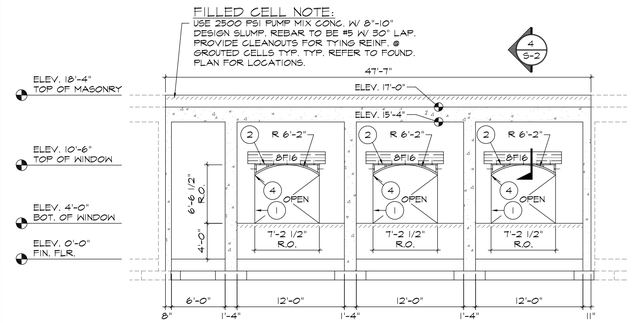

2 / S-4 NORTH ELEVATION (STRUCTURAL)
SCALE: 1/8" = 1'-0"

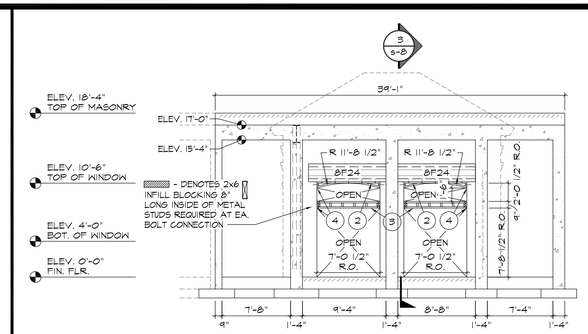

3 / S-4 NORTH ELEVATION (STRUCTURAL)
SCALE: 1/8" = 1'-0"

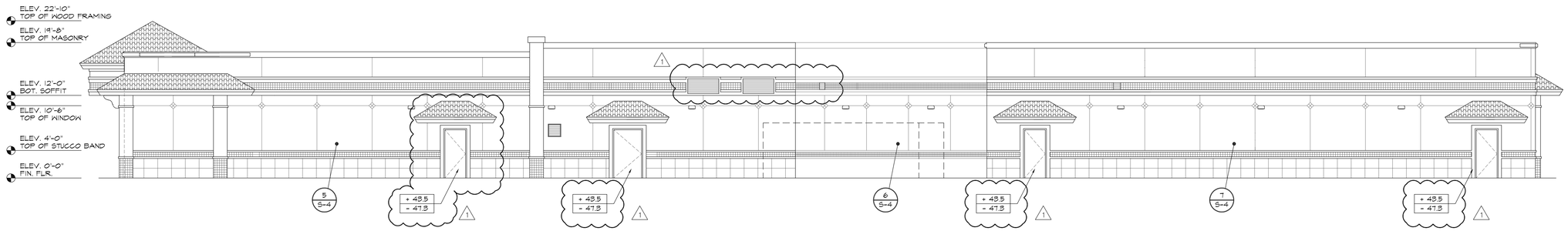

4 / S-4 WEST ELEVATION (ARCHITECTURAL)
SCALE: 1/8" = 1'-0"

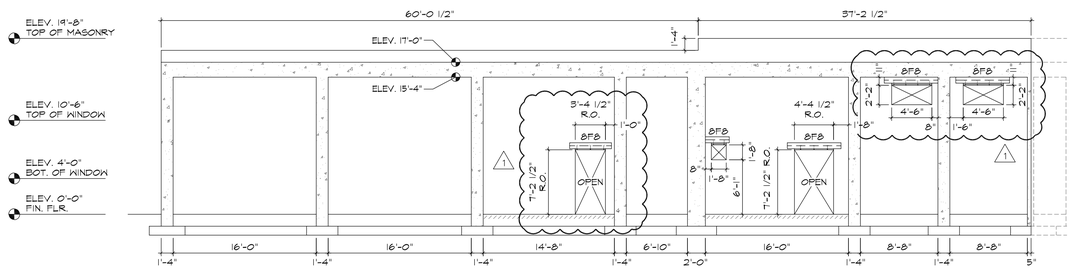

5 / S-4 WEST ELEVATION (STRUCTURAL)
SCALE: 1/8" = 1'-0"

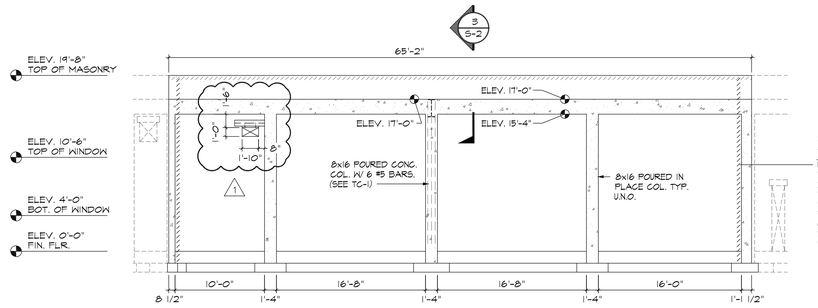

FILLED CELL NOTE:
USE 2500 PSI PUMP MIX CONC. W/ 8"-10" DESIGN SLUMP. REBAR TO BE #5 W/ 30" LAP. PROVIDE CLEANOUTS FOR TYING REINF. @ GROUTED CELLS TYP. TYP. REFER TO FOUND. PLAN FOR LOCATIONS.

6 / S-4 WEST ELEVATION (STRUCTURAL)
SCALE: 1/8" = 1'-0"

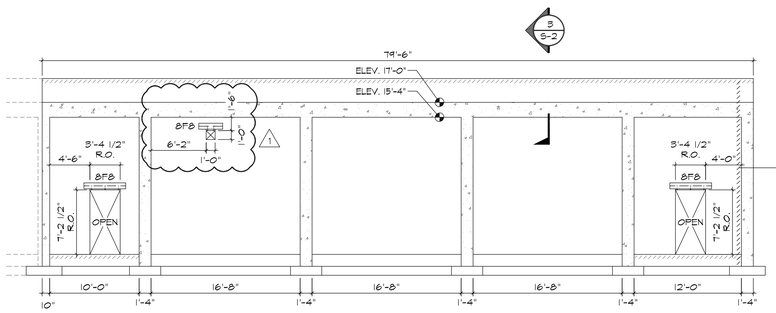

FILLED CELL NOTE:
USE 2500 PSI PUMP MIX CONC. W/ 8"-10" DESIGN SLUMP. REBAR TO BE #5 W/ 30" LAP. PROVIDE CLEANOUTS FOR TYING REINF. @ GROUTED CELLS TYP. TYP. REFER TO FOUND. PLAN FOR LOCATIONS.

7 / S-4 WEST ELEVATION (STRUCTURAL)
SCALE: 1/8" = 1'-0"

KEY NOTES:

1. SIMPSON NO. A-35 OR EQ. USE TAPCONS @ CONC.
2. ALL STUDS TO BE 1 5/8 x 6" 18 GA. METAL. FASTEN TO WALL W/ 1/2" EXPANSION BOLTS @ 36" O.C. W/ MIN. 3 1/2" EMBEDMENT OR EPOXY ANCHORS W/ 4" EMBEDMENT
3. TRACK ABOVE DOOR AND BELOW TRANSOM TO BE MIN. 6" - 16 GA. INFILL STUDS TO BE 6"-18 GA PROVIDE ADDITIONAL ANCHORS PERELEVATION
4. 16 GA. CLIP ANGLE. SEE DETAIL 5 / S-3

ALL SCREW CONNECTIONS TO LIGHT GAUGE FRAMING TO USE #10 SELF DRILLING, SELF TAPPING SCREWS

+ 0.00
- 0.00
DENOTES DESIGN WIND PRESSURES IN PSF

NOTE:
ARCH. ELEV. SHOWN FOR REFERENCE ONLY REFER TO ARCH. ELEVATIONS FOR DETAILS & FINISHES.

REVISIONS	BY
BUILDING DEPT. REV. 5-14-08	MCM

Lindemann Bentzon Bojack
>> ENGINEERING DESIGN INSPECTION <<
731 E. HIGHWAY 50
CLERMONT, FLORIDA
34711
PHONE: (352)242-0100
FAX: (352)242-0302

ABC LIQUORS, INC.
8989 S. ORANGE AVE. - ORLANDO, FLA. 32809

ABC STORE NO. 50
SAWGRASS MILLS, SUNRISE, FLORIDA

STRUCTURAL ELEVATIONS

DRAWN:	R. CARDONA
CHECKED:	S. RIVERA
DATE:	3-1-07
SCALE:	AS NOTED
JOB No:	50

SHEET
S-4