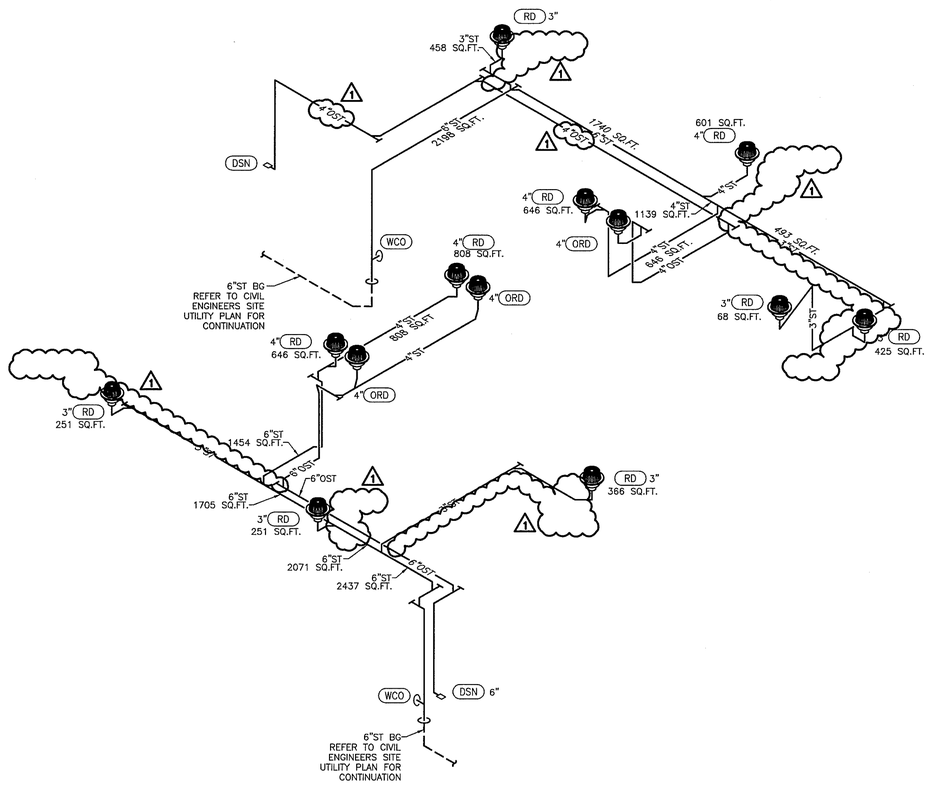

2 STORM DRAIN RISER DETAIL
NO SCALE

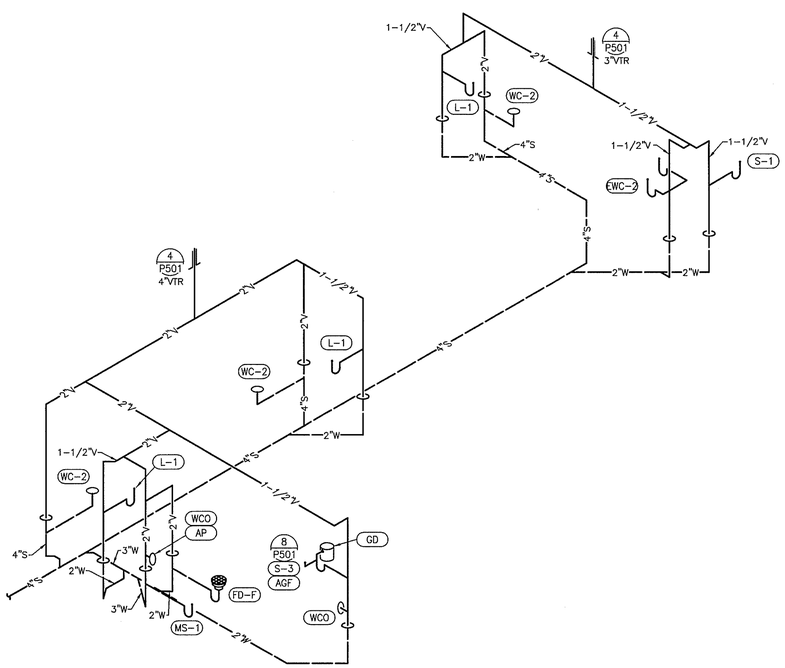

2 WASTE & VENT RISER DETAIL
NO SCALE

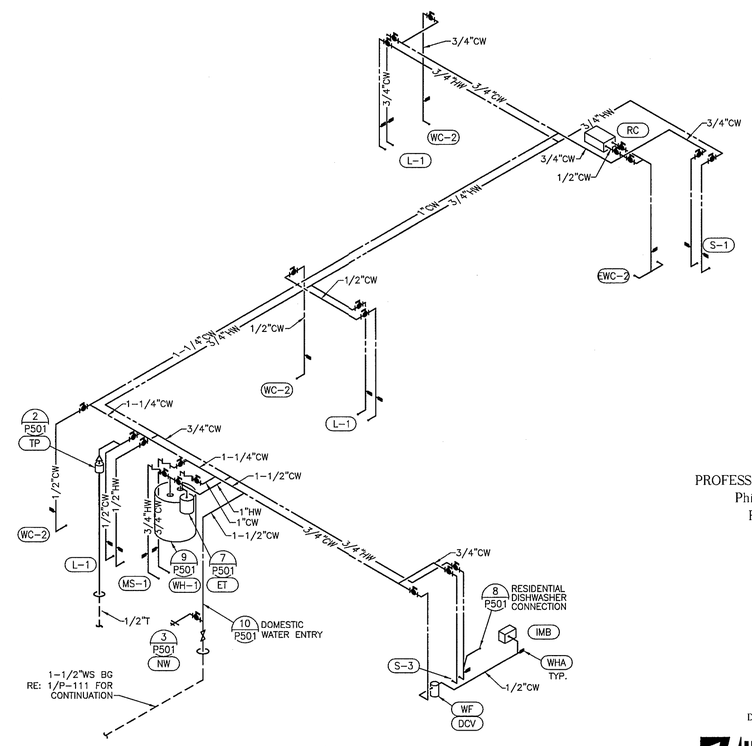

3 DOMESTIC WATER RISER DETAIL
NO SCALE

PROFESSIONAL ENGINEER
Phillip G. Miller
FL PE# -
51079

PHILLIP G. MILLER
LICENSE
No. 51079
STATE OF
FLORIDA
PROFESSIONAL ENGINEER

DATE: 3/15/10

HENDERSON ENGINEERS
10370 RICHMOND AVENUE, SUITE 370
HOUSTON, TX 77042
TEL 713 783 7707 FAX 713 783 7797
www.hei-eng.com
0950000686
FL CORPORATE NUMBER: EB 7606
EXPIRES 02/28/11

McCLEARY GERMAN ARCHITECTS

ARCHITECTURE
PLANNING
INTERIOR DESIGN

2425 WEST LOOP SOUTH
SUITE 665
HOUSTON TEXAS 77027
FAX 713-552-9810
713-552-0707
WWW.MGARCHITECTS.COM

CONSULTANTS

STRUCTURAL ENGINEER:
SCA Consulting Engineers

M/E/P/ ENGINEER:
Henderson Engineers

BankFIRST

Aloma Walk Branch
Aloma Ave.
Oviedo, FL 32765

ISSUE:

MARK	DATE	DESCRIPTION
	09-15-09	DEVELOPER REVIEW
	11-16-09	ISSUE FOR PERMIT
	12-02-09	ISSUE FOR PERMIT
	01-13-10	RESPONSE TO BUILDING PERMIT COMMENTS
	01-29-10	RESPONSE TO BUILDING PERMIT COMMENTS
1	03-17-10	BUILDING REVISIONS

PROJECT NO:
09-529.a

PLUMBING RISER DETAILS

P-503

PHILLIP G. MILLER