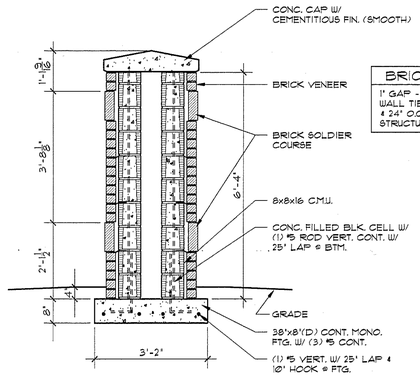

BRICK VENEER

1" GAP - WALL TIE @ 16" O.C. VERT. & 24" O.C. HORIZ. TO STRUCTURAL WALL

SECTION - A

SCALE: 1/2" = 1'-0"

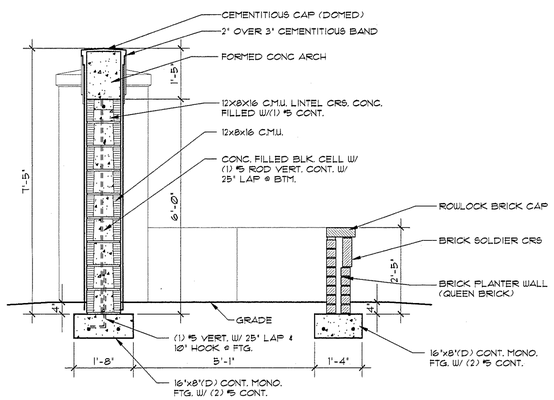

SECTION - B

SCALE: 1/2" = 1'-0"

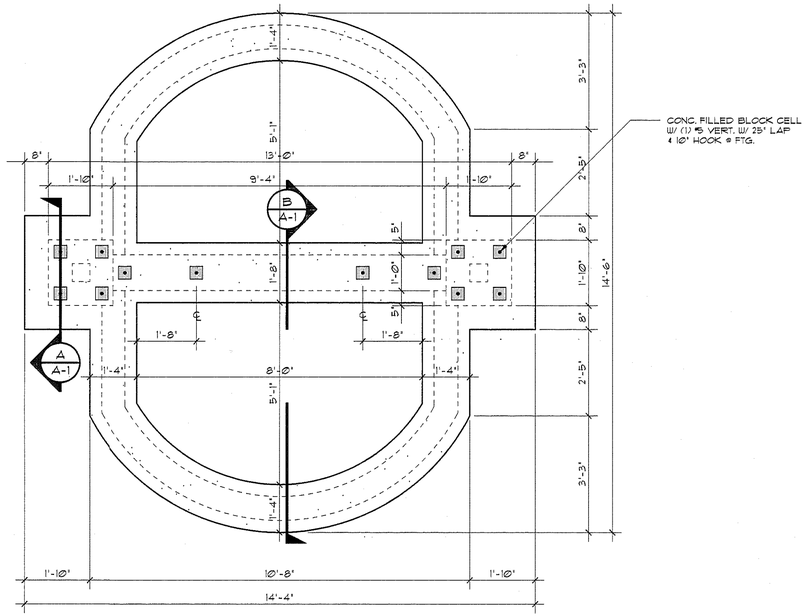

FOUNDATION PLAN

SCALE: 1/2" = 1'-0"

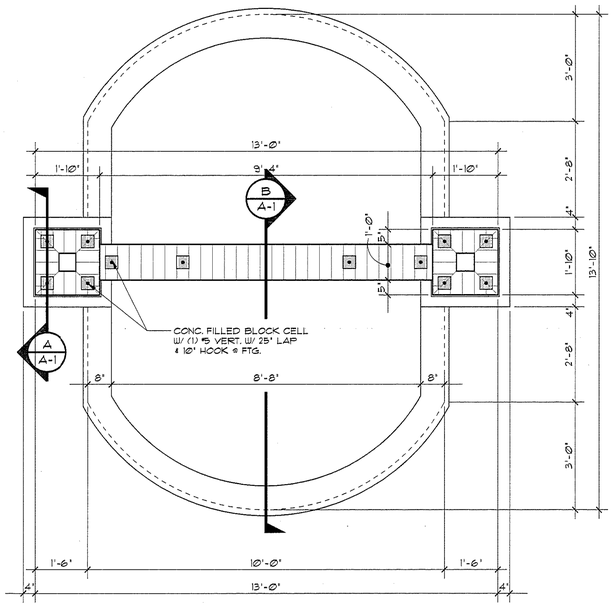

FLOOR PLAN

SCALE: 1/2" = 1'-0"

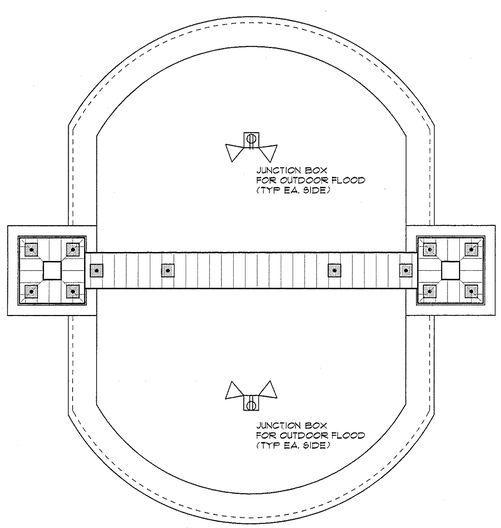

ELECTRICAL PLAN

SCALE: 1/2" = 1'-0"

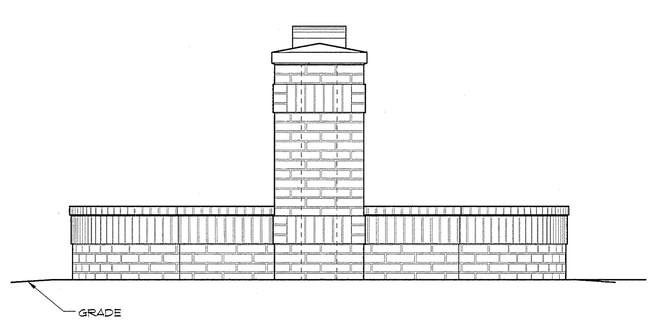

SIDE ELEVATION

SCALE: 1/2" = 1'-0"

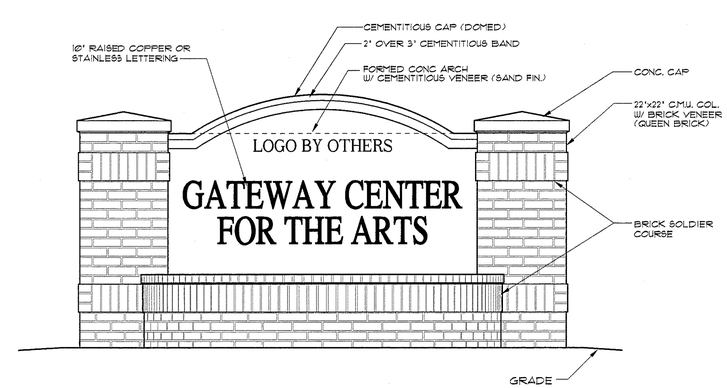

FRONT ELEVATION

SCALE: 1/2" = 1'-0"

DESIGNER HEREBY EXPRESSLY RESERVES HIS COPYRIGHT AND OTHER PROPERTY RIGHTS IN THESE PLANS. THESE PLANS AND DRAWINGS ARE NOT TO BE REPRODUCED, CHANGED OR COPIED IN ANY FORM OR MANNER WHATSOEVER, NOR ARE THEY TO BE ASSIGNED TO ANY PARTY WITHOUT FIRST OBTAINING THE EXPRESSED WRITTEN PERMISSION AND CONSENT OF GERALD GROSS ARCHITECT.

GERALD GROSS AIA FAIA
architect
780 Deltona Blvd. Suite 105
Deltona, Florida 32725
386-574-2021
FL. REG. ARCHITECT NO. 5998

Ver. 10

SIGN

Gateway Center for the Arts

DEBARY, FLORIDA

REVISIONS

PROJECT NO.: 06CA1061
DATE: 4 APR 2008
DRAWN BY: SMC
SHEET NO.: A-7