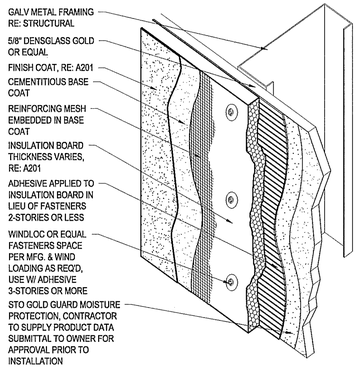

1 EIFS / Framing Assembly
Scale 1 1/2"=1'-0"

NOTE: DESIGN PER EIMA APPROVED GUIDELINES

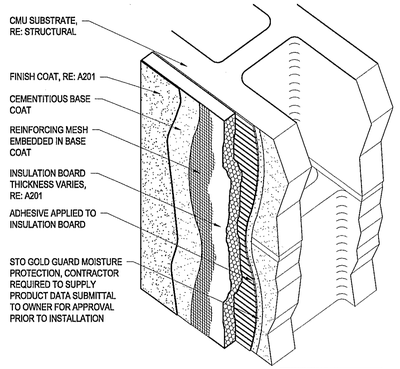

2 EIFS / CMU Assembly
Scale 1 1/2"=1'-0"

NOTE: DESIGN PER EIMA APPROVED GUIDELINES

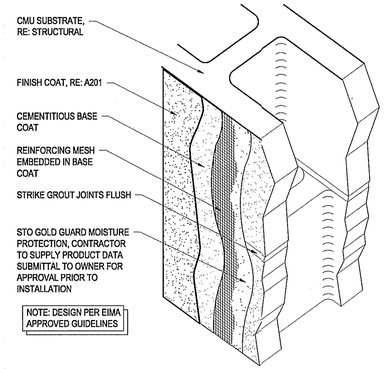

NOTE: DESIGN PER EIMA APPROVED GUIDELINES

3 EIFS Direct Apply / CMU Assembly
Scale 1 1/2"=1'-0"

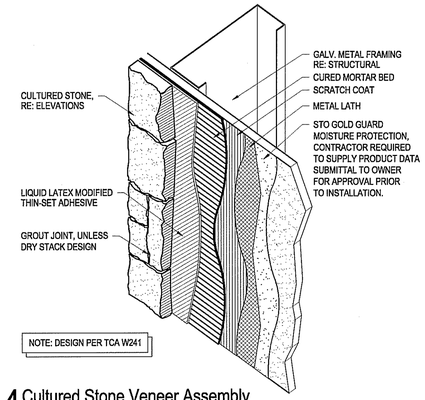

NOTE: DESIGN PER TCA W241

4 Cultured Stone Veneer Assembly
Scale 1 1/2"=1'-0"

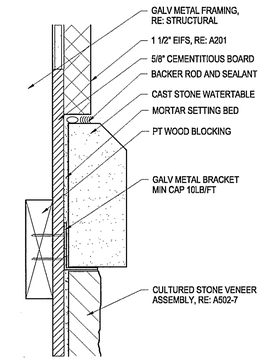

5 Water Table Detail
Scale 3"=1'-0"

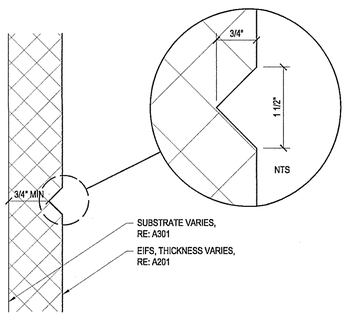

6 EIFS "V" Groove Reveal Detail
Scale 3"=1'-0"

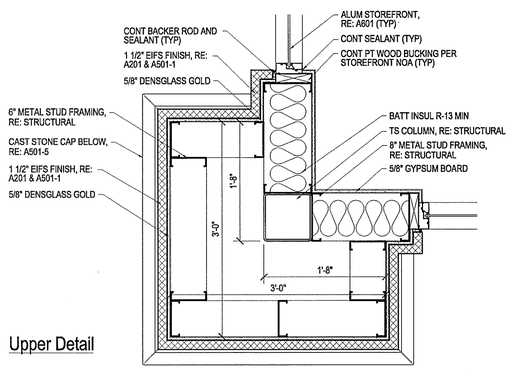

Upper Detail

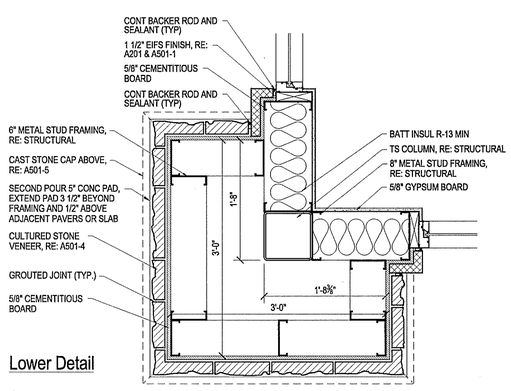

Lower Detail

7 Pilaster Detail
Scale 1"=1'-0"

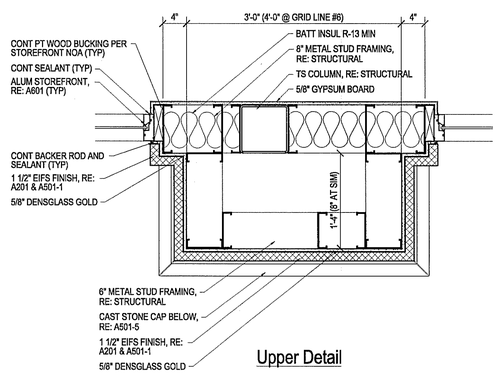

Upper Detail

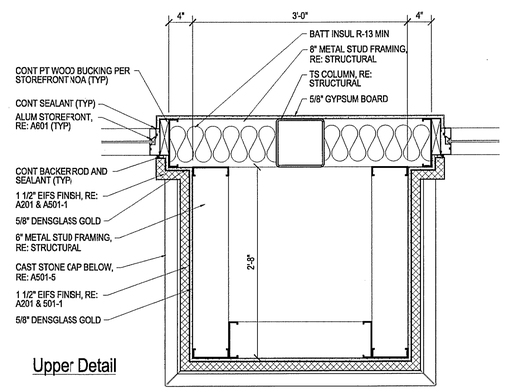

Upper Detail

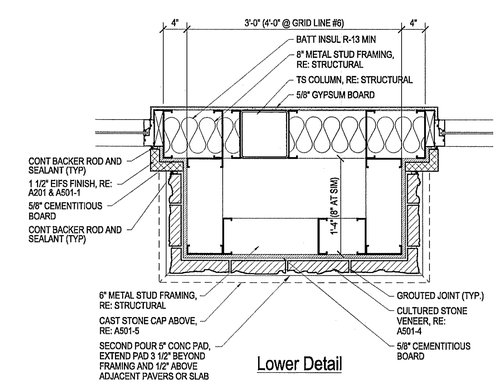

Lower Detail

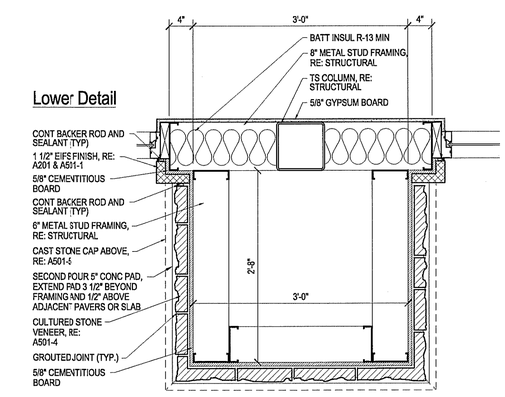

Lower Detail

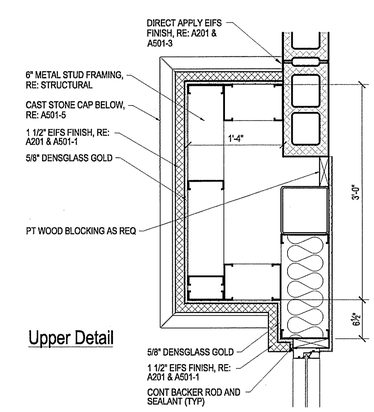

Upper Detail

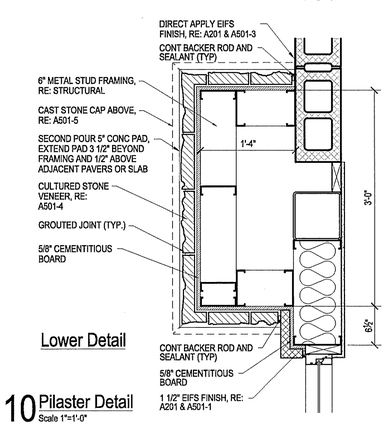

Lower Detail

10 Pilaster Detail
Scale 1"=1'-0"

COPYRIGHT © - All reports, plans, specifications, computer files, field data, notes and other documents are instruments of service prepared by Cuhaci & Peterson. C & P is as a Notice of Federal copyright law. Any use or reproduction of this document without written permission from C & P is a violation of federal copyright law.

Cuhaci & Peterson
Architects Engineers Planners
Florida Corporate Certificate #AA C000526
1925 Prospect Avenue, Orlando, FL 32814
Ph. 407.661.3100 - Fax 407.661.9101
www.c-p.com

CLIENT NAME
Weingarten Realty Investors, Inc.
2720 E. Colonial Drive
Orlando, FL 32803

PROJECT NAME
Outparcel 5 @ Palm Coast Landing
N.E.C. SR 100 and Belle Terre Parkway
Palm Coast, Florida

SHEET TITLE
Exterior Cladding Details, & Exterior Plan Details

GREGORY SIMPSON
FL# 68952

RELEASE

PROJECT NO.	DATE	DRAWN	CHECKED
208050	06/26/08	CMI	JEI

A501