* CONTRACTORS SHALL VERIFY EXISTING CONDITIONS AND CORRELATE DIMENSIONS PRIOR TO PROVIDING THE WORK DETAILED IN THESE DRAWINGS. ANY ERRORS, OMISSIONS OR CONFLICTS SHALL BE REPORTED TO SBLM ARCHITECTS PC FOR ADVISEMENT.
* COPYRIGHT SBLM ARCHITECTS PC. UNAUTHORIZED REPRODUCTION OR OTHER USE OF THIS DRAWING IS PROHIBITED.

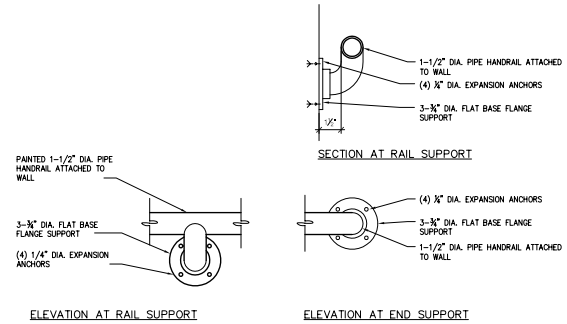

TYPICAL WALL RAILING DETAILS | 11
REF.: A2.1 | SOURCE: | 3" = 1'-0"

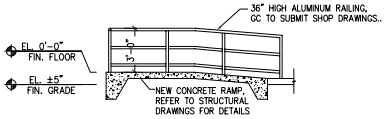

RAMP DETAIL | 04
REF.: A2.1 | SOURCE: | 1/4" = 1'-0"

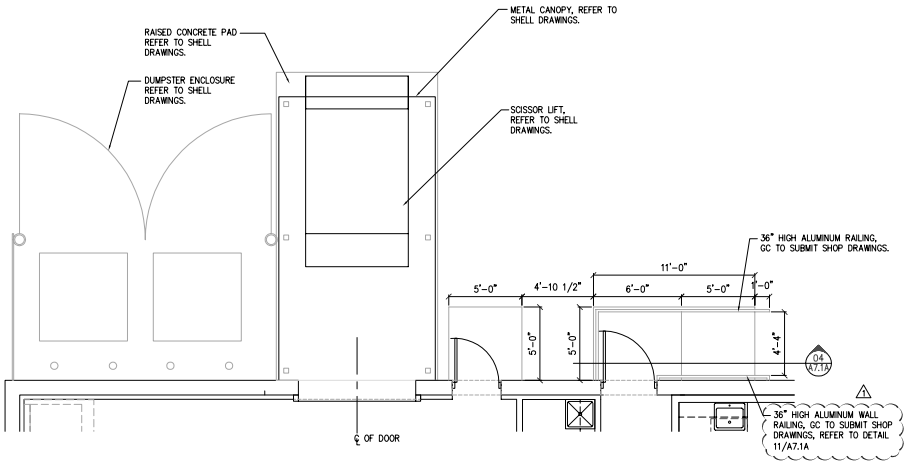

LARGE SCALE PLAN | 01
REF.: A2.1 | SOURCE: | 1/4" = 1'-0"

SBLM Architects
151 West 26th Street
New York, New York 10001
Tel: 212 255 5200
Fax: 212 675 4228
www.sblm.com

PETCO ANIMAL SUPPLIES STORES, INC.
PETCO "CARY, NC"
213 CROSSROADS BOULEVARD
CARY, NC 27518

DISTRIBUTION	DATE
75% SUBMISSION	01-28-10
98% SUBMISSION	02-25-10
ISSUED FOR CONSTRUCTION	02-26-10
1 ADDENDUM #2	03-11-10

SBLM JOB#	PETCO/TCAL JOB #
09147	09277
DRAWN:	CHECKED:
FR	DF

DRAWING TITLE:
LARGE SCALE PLANS AND EXTERIOR DETAILS

A7.1A