- CONTRACTOR(S) SHALL VERIFY EXISTING CONDITIONS AND CORRELATE DIMENSIONS PRIOR TO PROVIDING THE WORK DETAILED IN THESE DRAWINGS, AND SHALL PROMPTLY NOTIFY THE ARCHITECT OF ANY DISCREPANCIES.
- COPYRIGHT SBLM, ARCHITECTS PC. UNAUTHORIZED REPRODUCTION OR OTHER USE OF THIS DRAWING IS PROHIBITED.

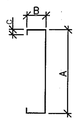

TYPICAL STUD

LIGHT STEEL HEADER FRAMING PROPERTIES								
TYPE	A (IN)	B (IN)	C (IN)	THICKNESS	AREA ( )IN²	Sx ( )IN³	Ix ( )IN⁴	MAX. LENGTH
8" HEADER STUD	8	2	5/8"	0.0713 (14 GAUGE)	0.927	1.964	8.14	20'-0"
6" HEADER STUD	6	1-3/8"	3/8"	0.0566 (16 GAUGE)	0.514	0.809	2.518	14'-0"

NOTES:

1. ALL PROPERTIES SHOWN ABOVE ARE MINIMUM.
2. STUD AND JOIST DESIGNATIONS ARE PER STEEL STUD MANUFACTURERS ASSOCIATION (SSMA). ER-4943P

STEEL STUD AND JOIST NOTES

1. ALL STUDS, TRACKS AND JOISTS SHALL BE FORMED FROM STANDARD COMMERCIAL STEEL ASTM A570, WITH A MINIMUM YIELD POINT OF 33,000 PSI FOR MATERIAL 18 GAUGE AND THINNER AND 50,000 PSI FOR MATERIAL 16 GAUGE AND THICKER.

2. ALL FRAMING COMPONENTS SHALL BE CUT SQUARELY OR ON AN ANGLE (SUCH AS BRACING) TO SQUARELY FIT AGAINST ABUTTING MEMBERS. MEMBERS SHALL BE HELD FIRMLY IN POSITION UNTIL PROPERLY FASTENED.

3. STUDS, TRACKS AND JOISTS SHALL BE ATTACHED BY WELDING AND/OR SELF DRILLING SCREWS AS NOTED IN THE DETAILS.

4. STEEL STUDS AND JOISTS SHALL BE AS MANUFACTURED BY MEMBER OF SSMA OR EQUIVALENT PRODUCT SUBSTITUTED PER SPECIFICATIONS. MINIMUM STUD AND JOIST PROPERTIES SHALL BE AS LISTED ABOVE. MAXIMUM STUD SPACING IS 16" O.C. AND MAXIMUM JOIST SPACING 24" O.C., UNLESS OTHERWISE NOTED.

5. RUNNER TRACKS SHALL BE THE SAME GAUGE AS STUDS SUPPORTED, UNLESS OTHERWISE NOTED. TRACKS SHALL BE FASTENED TO STRUCTURE AT 24" O.C. MAXIMUM UNLESS OTHERWISE NOTED.

6. PROVIDE BLOCKING OF WALL STUDS AT 3'- 6" O.C. MAXIMUM WHERE FINISHES DO NOT OCCUR ON BOTH SIDES OF WALL, SEE STUD BLOCKING DETAIL.

7. WHERE NECESSARY, STEEL STUDS SHALL BE COORDINATED WITH GLAZING MANUFACTURER, MECHANICAL, ELECTRICAL AND ALL OTHER TRADES.

INTERIOR METAL FRAMING NOTES — 13

REF.: A7.1 SOURCE: N.T.S.

METAL STUD ATTACHMENT SCHEDULE
1. ALL 6" TO 6" METAL STUDS USE (5) TYPE "B" SCREWS.
2. ALL 6" TO 3 5/8" METAL STUDS USE (4) TYPE "B" SCREWS.
3. ALL 3 5/8" TO 3 5/8" METAL STUDS USE (4) TYPE "B" SCREWS.
4. SEE SCHEDULE FOR SCREW SIZES.

METAL SCREW SCHEDULE
SCREW TYPE "A" = 12-24x1 1/4" HWH TEK S/S
SCREW TYPE "B" = 10-16x3/4" HWH TEK S/1
SCREW TYPE "C" = 12-14x3/4" HWH TEK S/1
ALL SCREWS BY BUILDING FASTENERS INC. OR EQUAL.

NOTE: SEE DEFLECTION TRACK DETAILS FOR CONFIGURATION OF DEEP LEG AND FIRE RATED DEFLECTION TRACKS

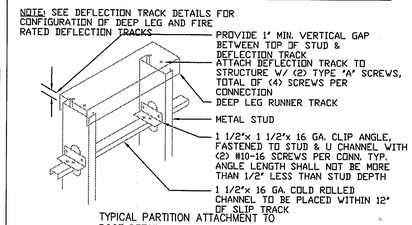

TYPICAL PARTITION ATTACHMENT TO ROOF DETAIL

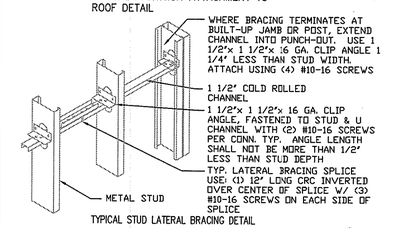

TYPICAL STUD LATERAL BRACING DETAIL

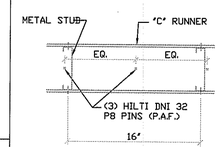

TYPICAL TRACK TO CONCRETE ATTACHMENT – PLAN VIEW

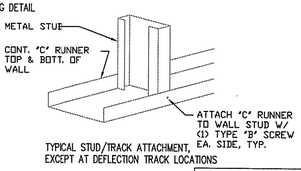

TYPICAL STUD/TRACK ATTACHMENT, EXCEPT AT DEFLECTION TRACK LOCATIONS

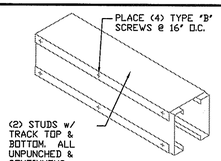

TYPICAL BOXED BEAM DETAIL

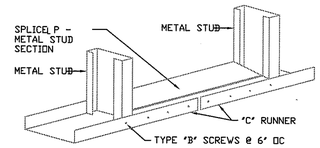

TYPICAL TRACK SPLICE DETAIL

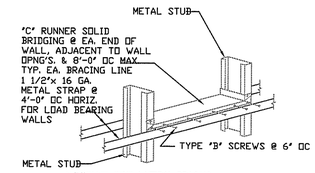

ALTERNATE STUD LATERAL BRACING DETAIL

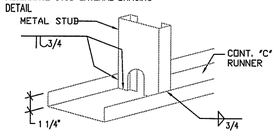

ALTERNATE STUD/TRACK ATTACHMENT, EXCEPT AT DEFLECTION TRACK LOCATIONS

INTERIOR METAL FRAMING DETAILS — 11

REF.: SOURCE: N.T.S.

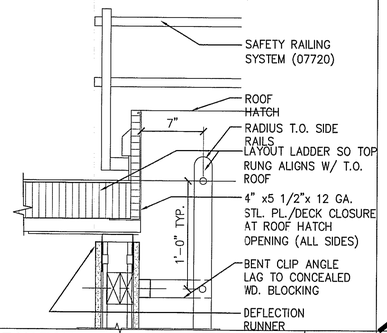

ROOF HATCH DETAIL — 07

REF.: A2.5. A0.2 SOURCE: 1 1/2"=1'-0"

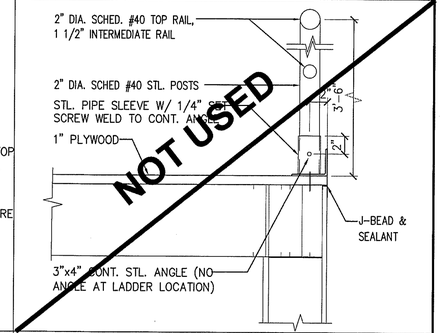

PLATFORM GUARDRAIL — 06

REF.: A2.1 SOURCE: 1-1/2"=1'-0"

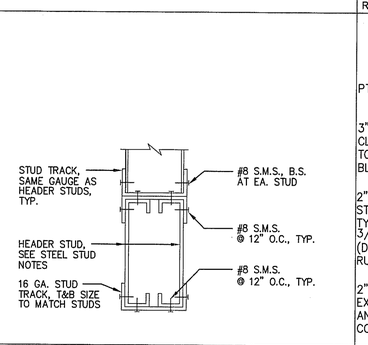

LADDER DETAIL EQMT. PLATFORM — 02

REF.: A2.1 SOURCE: 1/4"=1'-0"

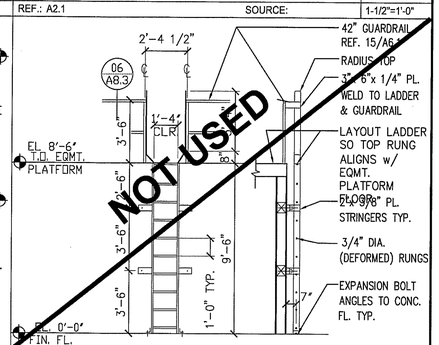

LADDER DETAIL EQMT. PLATFORM — 01

REF.: A2.1 SOURCE: 1/4"=1'-0"

TYP. INTERIOR HEADER SECTION DETAIL — 03

REF.: A7.1 SOURCE: N.T.S.

SBLM Architects
151 West 28th Street
New York, New York 10001
Telephone 212 995 5600
Fax 212 675 4228
www.sblm.com

PETCO ANIMAL SUPPLIES STORES, INC.
PETCO "CARY, NC"
213 CROSSROADS BOULEVARD
CARY, NC 27518

PETCO
9128 RESEARCH ROAD
SAN DIEGO, CALIFORNIA 92121

DISTRIBUTION:	DATE:
75% SUBMISSION	01-29-10
98% SUBMISSION	02-25-10
ISSUED FOR CONSTRUCTION	02-26-10

SBLM JOB#	PETCO P.M. JOB #
09147	09277
DRAWN:	CHECKED:
FR	DF

DRAWING TITLE:

INTERIOR DETAILS

A8.3

0 1/4" 1/2" 1" 2" 3" 4" 5"