CONTRACTOR(S) SHALL VERIFY EXISTING CONDITIONS AND CORRELATE DIMENSIONS PRIOR TO PROVIDING THE WORK DETAILED IN THESE DRAWINGS, AND SHALL PROMPTLY NOTIFY THE ARCHITECT OF ANY DISCREPANCIES.
COPYRIGHT SBLM, ARCHITECTS PC. UNAUTHORIZED REPRODUCTION OR OTHER USE OF THIS DRAWING IS PROHIBITED.

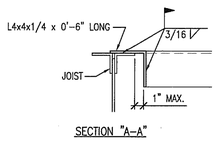

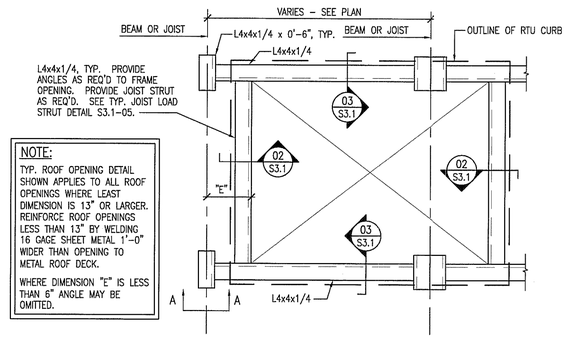

NOTE:

TYP. ROOF OPENING DETAIL SHOWN APPLIES TO ALL ROOF OPENINGS WHERE LEAST DIMENSION IS 13" OR LARGER. REINFORCE ROOF OPENINGS LESS THAN 13" BY WELDING 16 GAGE SHEET METAL 1'-0" WIDER THAN OPENING TO METAL ROOF DECK.

WHERE DIMENSION "E" IS LESS THAN 6" ANGLE MAY BE OMITTED.

TYP. FRAMED ROOF OPENING		01
REF.:	SOURCE:	NONE

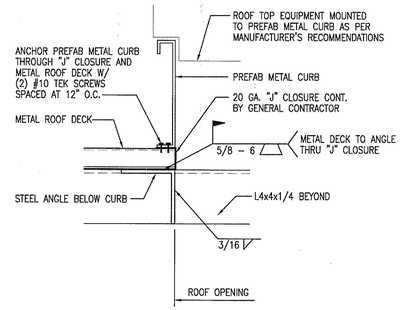

SECTION AT FRAMED OPENING		02
REF.:	SOURCE:	NONE

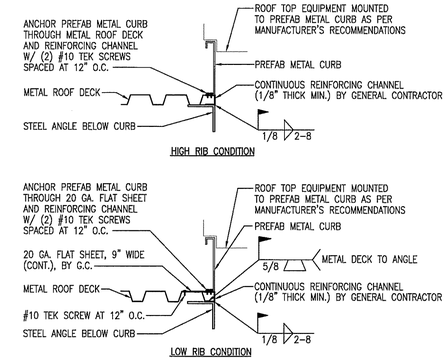

SECTION AT FRAMED OPENING		03
REF.:	SOURCE:	NONE

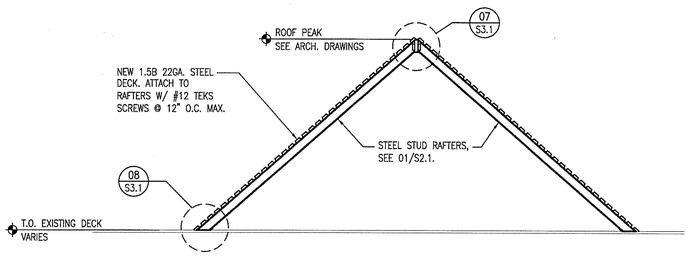

SECTION		04
REF.:	SOURCE:	1/4" = 1'-0"

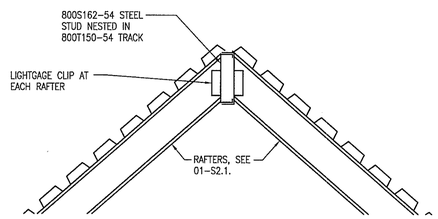

SECTION		07
REF.:	SOURCE:	1" = 1'-0"

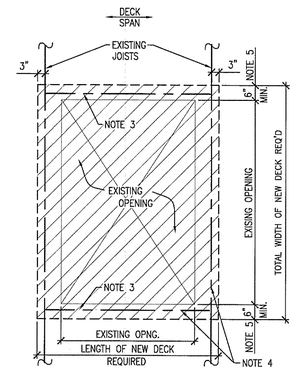

AT LOCATION(S) WHERE EXISTING ROOF OPENING IS BETWEEN EXISTING JOISTS

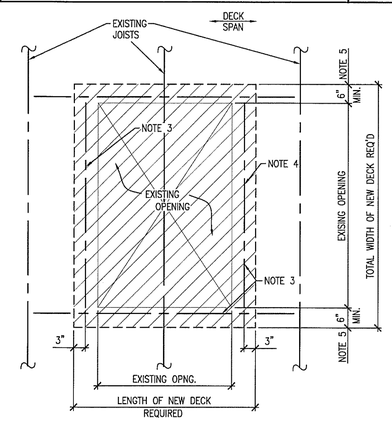

AT LOCATION(S) WHERE EXISTING ROOF OPENING STRADDLES EXISTING ROOF JOIST

NOTES:

1. REMOVE ROOFING AND INSULATION AS REQUIRED TO INSTALL NEW STEEL DECKING AS DETAILED. REPLACE INSULATION AND PATCH ROOFING AS REQUIRED.
2. NEW ROOF DECK TO MATCH EXISTING (GAUGE, FINISH, AND PROFILE). CONTRACTOR TO FIELD VERIFY EXACT MANUFACTURER BRAND USED IN EXISTING CONSTRUCTION.
3. EXISTING RTU OPENING AUXILLARY FRAMING.
4. ATTACH NEW DECK TO EXISTING JOISTS @ AUXILLARY FRAMING WITH 12-24x7/8 HWH TEKS/4 SCREWS @ 6" O.C. AROUND ALL FOUR SIDES OF EXISTING OPENING.
5. ENGAGE AT LEAST ONE RIB MINIMUM ON EXISTING DECK BEYOND EXISTING OPENING.

EXISTING ROOF OPENING INFILL DETAIL		05
REF.:	SOURCE:	NONE

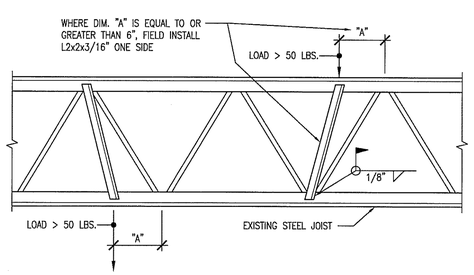

TYPICAL JOIST LOAD STRUT		06
REF.:	SOURCE:	NONE

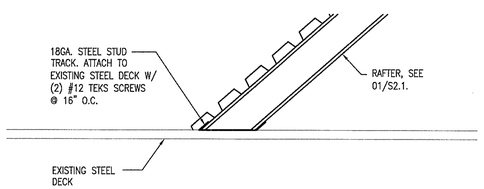

SECTION		08
REF.:	SOURCE:	1" = 1'-0"

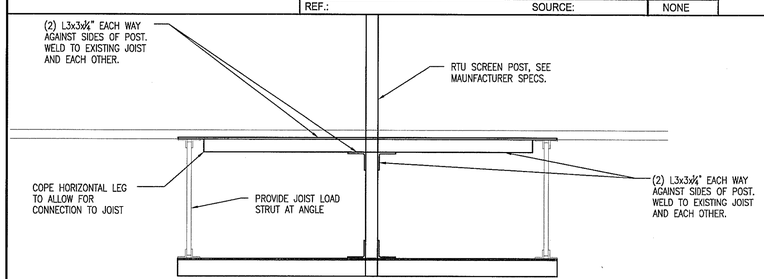

RTU SCREEN POST FRAMING		09
REF.:	SOURCE:	1"=1'-0"

Bowman Engineering, Inc.
3939 Old Flowery Branch Road
Oakwood, GA 30566
Phone: (770) 297-0075
Fax: (770) 297-0078

SBLM Architects
151 West 26th Street
New York, New York 10001
Telephone 212 995 5600
Fax 212 675 4228
www.sblm.com

PETCO ANIMAL SUPPLIES STORES, INC.
PETCO "CARY, NC"
213 CROSSROADS BOULEVARD
CARY, NC 27518

DISTRIBUTION:	DATE:

SBLM JOB#	PETCO P.M. JOB #
09147	09277
DRAWN:	CHECKED:
ARS	LTB

DRAWING TITLE:
ROOF FRAMING DETAILS

SCALE: AS NOTED

S3.1