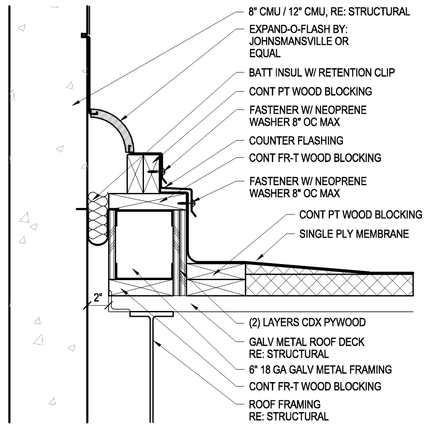

2 Roof Control Joint
Scale 1 1/2"=1'-0"

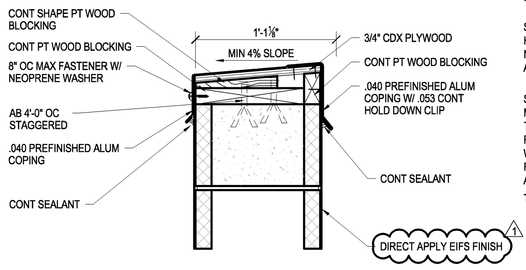

3 Parapet Detail
Scale 1 1/2"=1'-0"

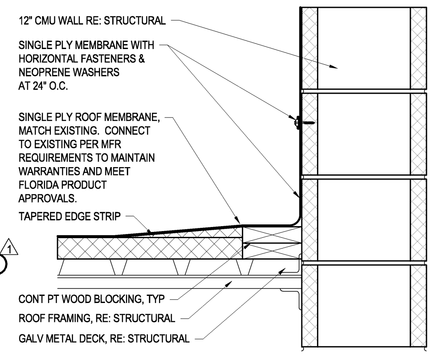

4 Roof Edge Detail
Scale 1 1/2"=1'-0"

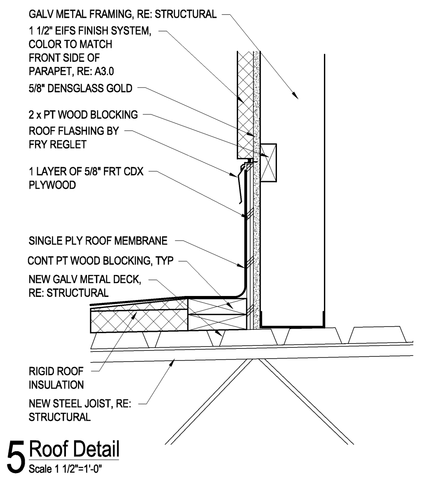

5 Roof Detail
Scale 1 1/2"=1'-0"

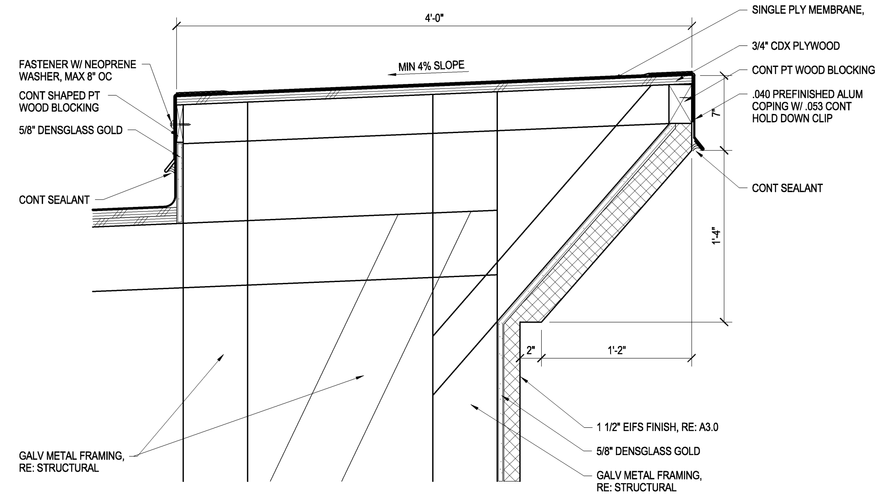

6 Cornice Detail
Scale 1 1/2"=1'-0"

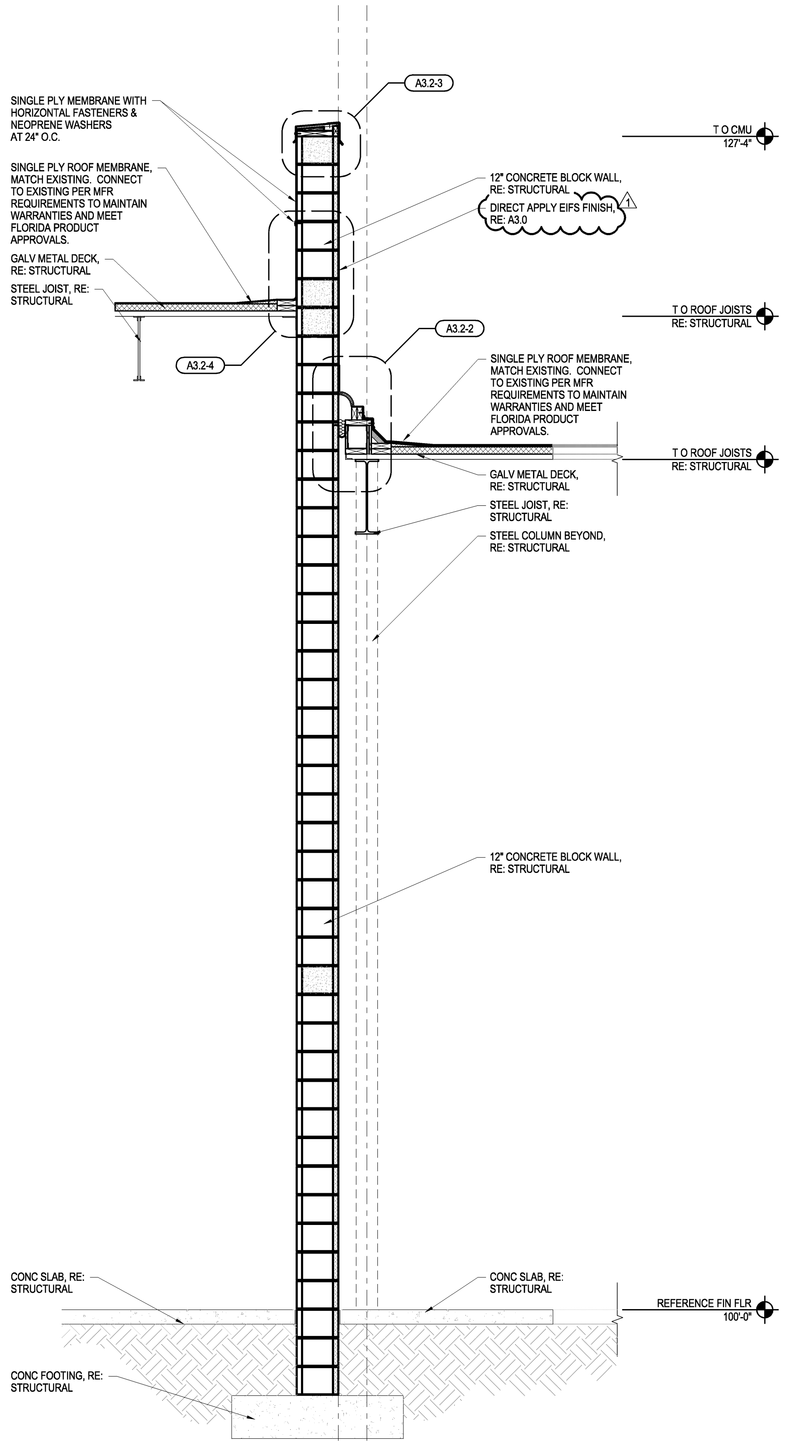

1 Wall Section
Scale 1/2"=1'-0"

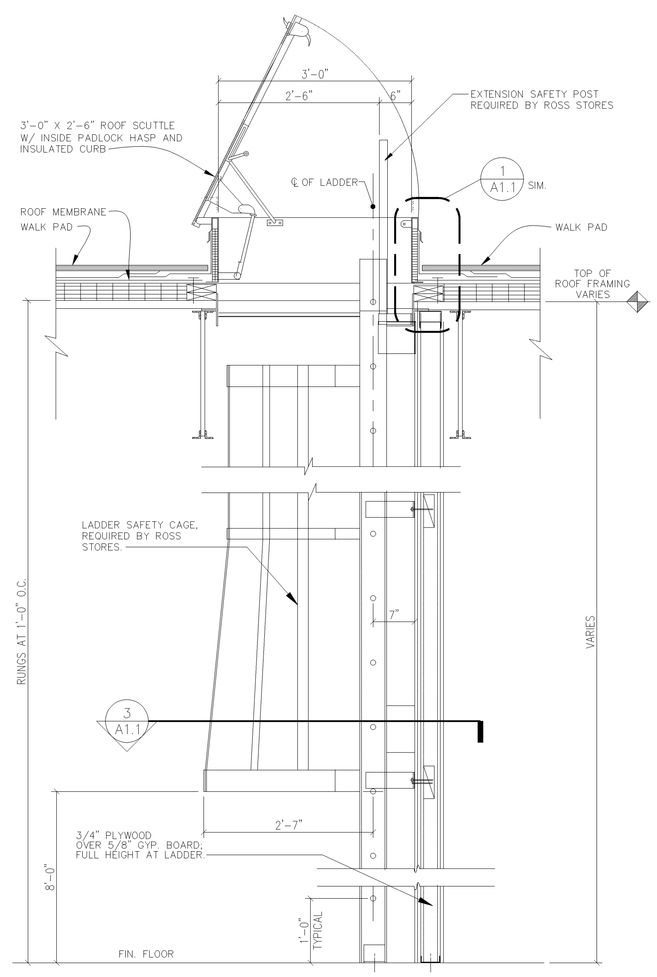

7 A3.2 ROOF ACCESS LADDER SECTION
SCALE: 3/4" = 1'-0"

Cuhaci & Peterson
Architects Engineers Planners
Florida Corporate Certificate #AA C000556
1925 Prospect Avenue, Orlando, FL 32814
Ph. 407.661.9100 - Fax 407.661.9101
www.cp.com

CLIENT NAME
Weingarten Realty Investors
2720 E. Colonial Drive
Orlando, Florida 32803

PROJECT NAME
Ross Dress for Less
The Marketplace
Seminole Towne Center
Sanford, Florida

SHEET TITLE
Wall Section & Details

RELEASE
1 TENANT REVIEW COMMENTS, 07/02/10

PROJECT NO. 205517
DATE 07/22/09
DRAWN CAL-BI
CHECKED KP

A3.2

COPYRIGHT © - All reports, plans, specifications, computer files, field data, notes and other documents are instruments of service prepared by Cuhaci & Peterson, C.A.P. as instruments of service remain the property of C.A.P. C.A.P. shall retain all common law, statutory and other reserved rights, including the copyright thereto. Any use or reproduction of this document without written permission from C & P is a violation of federal copyright laws.