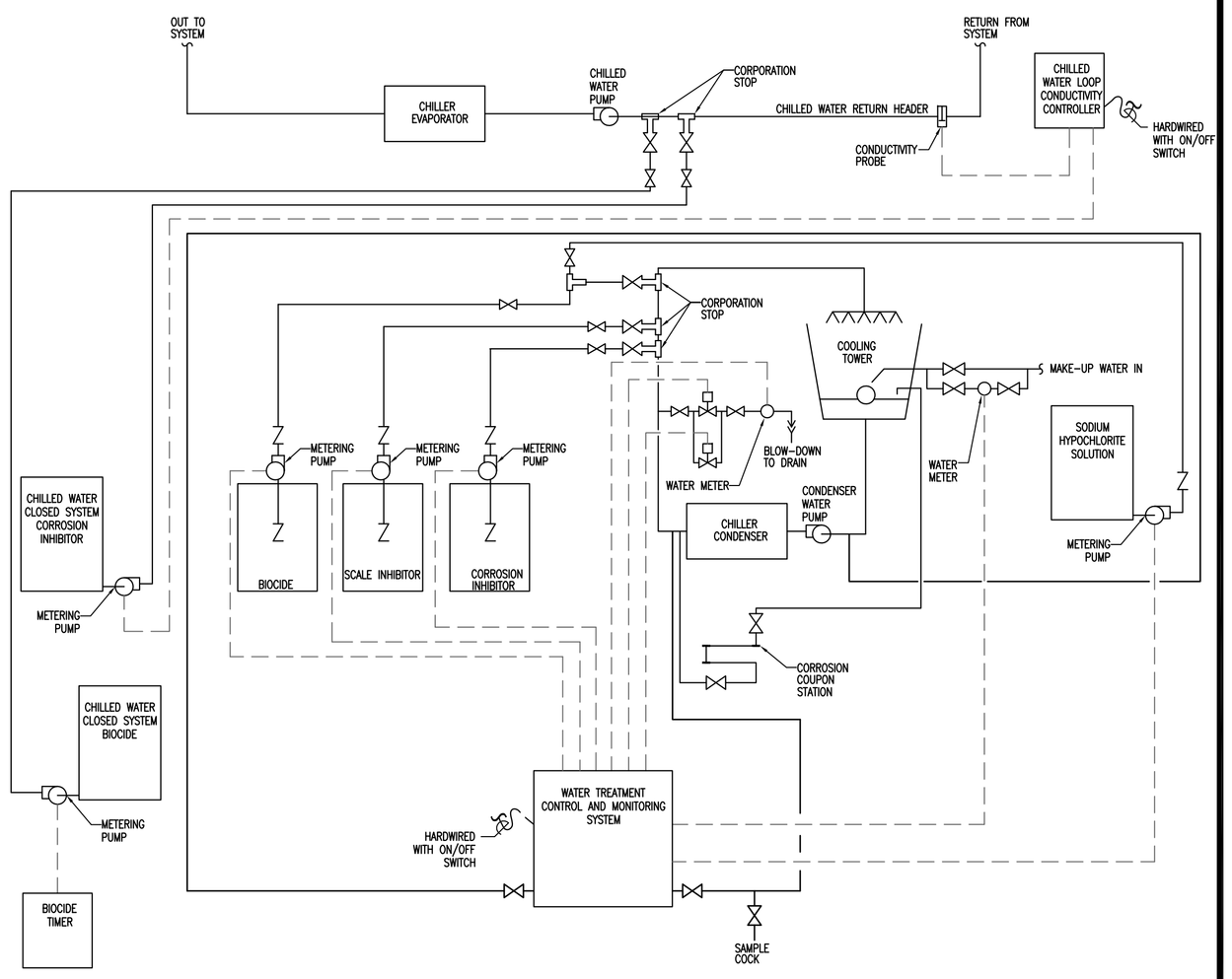

COOLING TOWER AND CHILLED WATER LOOP WATER TREATMENT AND MONITORING SYSTEM

NOT TO SCALE

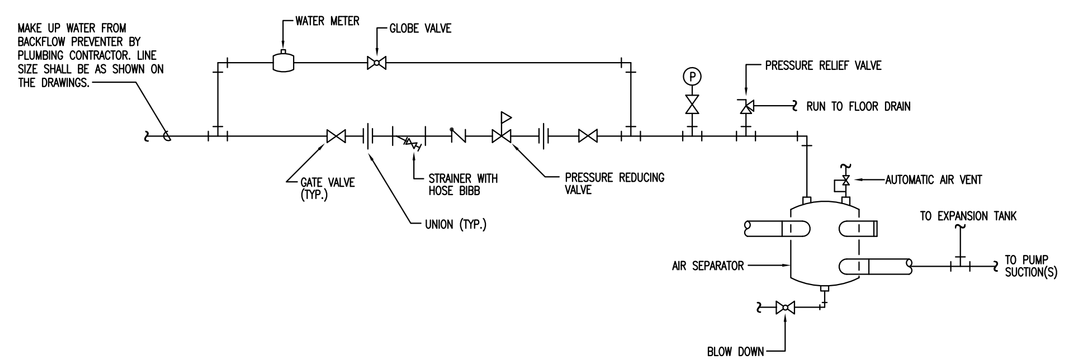

EXPANSION TANK AND MAKE-UP WATER CONNECTIONS

NOT TO SCALE

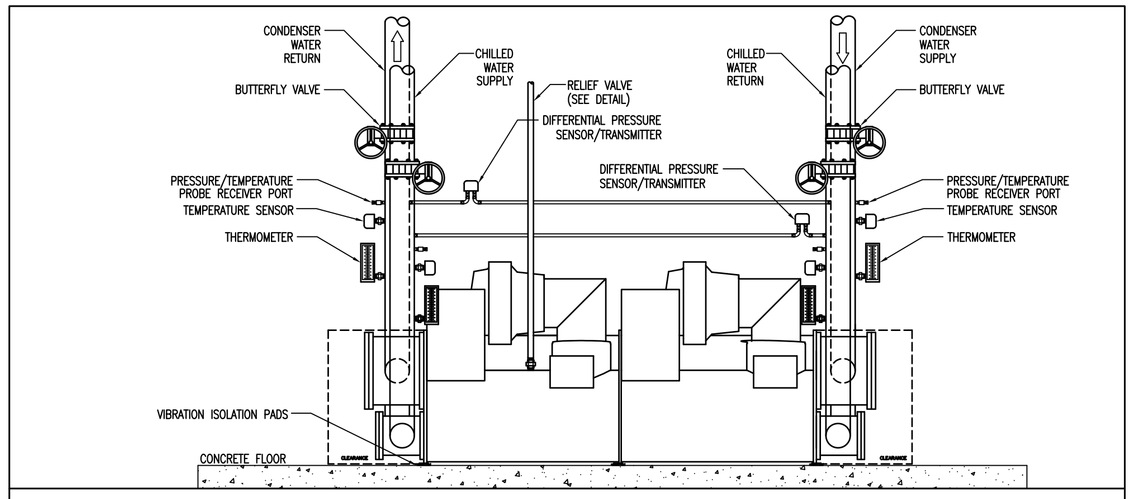

CHILLER INSTALLATION

NOT TO SCALE

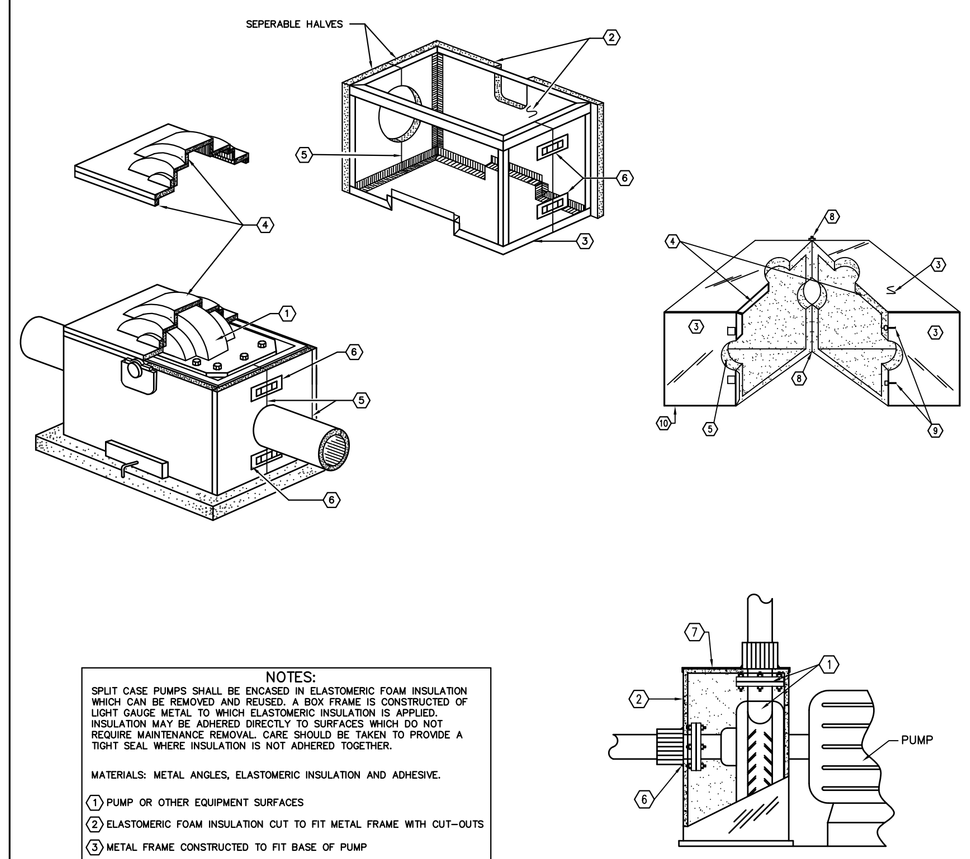

NOTES:

SPLIT CASE PUMPS SHALL BE ENCASED IN ELASTOMERIC FOAM INSULATION WHICH CAN BE REMOVED AND REUSED. A BOX FRAME IS CONSTRUCTED OF LIGHT GAUGE METAL TO WHICH ELASTOMERIC INSULATION IS APPLIED. INSULATION MAY BE ADHERED DIRECTLY TO SURFACES WHICH DO NOT REQUIRE MAINTENANCE REMOVAL. CARE SHOULD BE TAKEN TO PROVIDE A TIGHT SEAL WHERE INSULATION IS NOT ADHERED TOGETHER.

MATERIALS: METAL ANGLES, ELASTOMERIC INSULATION AND ADHESIVE.

1. PUMP OR OTHER EQUIPMENT SURFACES
2. ELASTOMERIC FOAM INSULATION CUT TO FIT METAL FRAME WITH CUT-OUTS
3. METAL FRAME CONSTRUCTED TO FIT BASE OF PUMP
4. REMOVABLE TOP SHALL BE CONSTRUCTED ON A FRAME AND FOAM FITTED AS SHOWN.
5. ADHESIVE
6. STAINLESS STEEL LATCH. (TYPICAL OF BOTH ENDS)

SPLIT CASE PUMP- REMOVABLE AND REUSABLE INSULATION COVER

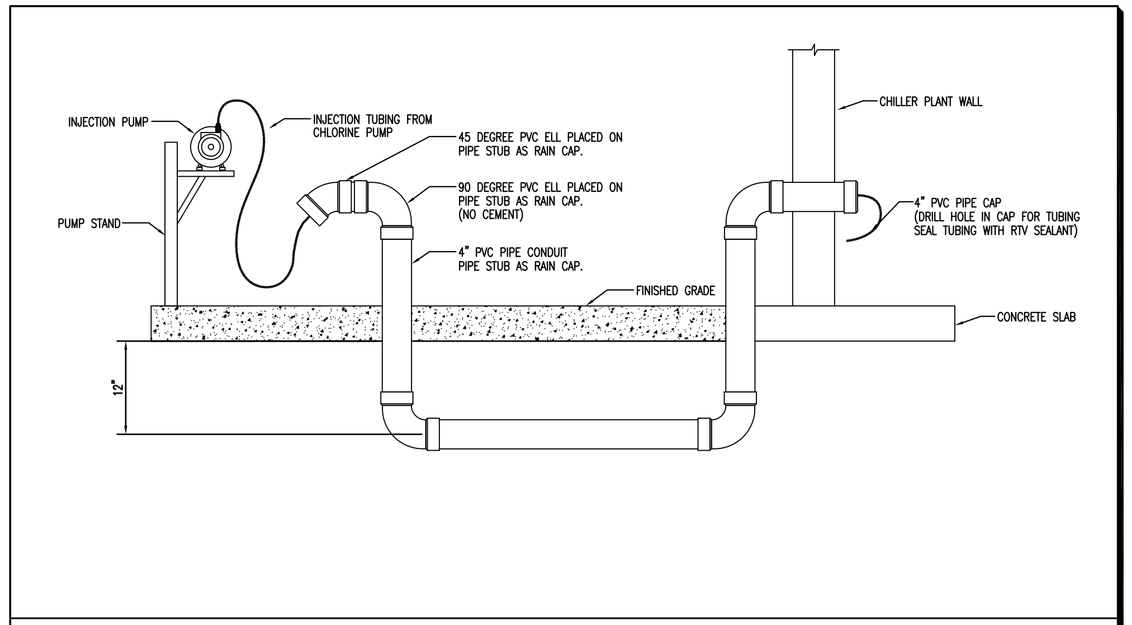

UNDERGROUND CHLORINE TANK PIPING

NOT TO SCALE

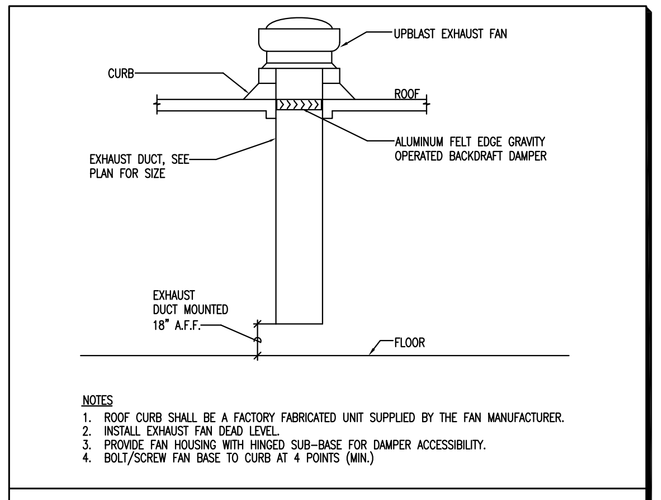

NOTES
1. ROOF CURB SHALL BE A FACTORY FABRICATED UNIT SUPPLIED BY THE FAN MANUFACTURER.
2. INSTALL EXHAUST FAN DEAD LEVEL.
3. PROVIDE FAN HOUSING WITH HINGED SUB-BASE FOR DAMPER ACCESSIBILITY.
4. BOLT/SCREW FAN BASE TO CURB AT 4 POINTS (MIN.)

REFRIGERANT PURGE FAN

NOT TO SCALE

KENYON & PARTNERS, INC.
PROFESSIONAL ENGINEERS
3203 QUEEN PALM DRIVE
TAMPA, FLORIDA 33619
PHONE (813) 241-6488
FAX (813) 241-6498
Board of Professional Engineers - License # 0000198

SEAL

DEAN S. KENYON, P.E.
FL. LIC. No. 44012

Signature Date

DRAWING REVISIONS

REVISION	COMMENTS:
△	
△	
△	
△	
△	
△	

UNIVERSITY OF SOUTH FLORIDA
SOUTH EAST CHILLER PLANT
BR-590 COMPONENT #6

12225 USF MAPLE DRIVE
TAMPA, FLORIDA 33620

DRAWING TITLE :
MECHANICAL DETAILS

Drawing Progress: 100% CONSTRUCTION DOCUMENTS

FILE NAME:	081106_M-20.DWG
DATE:	03-31-2009
PLOT SIZE:	NOT TO SCALE
CADDED BY:	SRN
DESIGNED BY:	TSH
CHECKED BY:	TSH

PROJECT NO.
081106

SHEET NO.
M-20

20 OF 22

Z:\University of South Florida\081106 - South East Chiller Plant\Design-Chiller Plant-Corral\081106_M-20.dwg Apr 14, 2009 - 4:33pm scott.nelson

©2009 KENYON & PARTNERS, INCORPORATED
ALL RIGHTS RESERVED